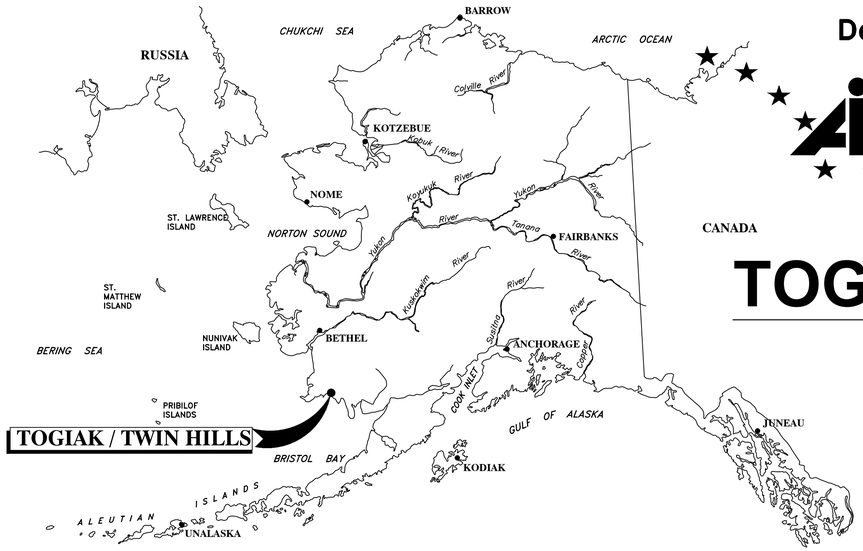

State of Alaska
Department of Community and Economic Development

AIDEA/AEA
Rural Energy Group
813 West Northern Lights Blvd.
Anchorage, Alaska 99503

ALASKA ENERGY AUTHORITY

TOGIAK / TWIN HILLS , ALASKA

TWIN HILLS
RPSU
ISSUED FOR CONSTRUCTION
AUGUST 2018

Project Number (Consultant) 30404.04 (AEA) _____
AEA Project Manager REBECCA GARRETT
Construction Manager _____
Final Design (Date) _____
Fire Marshal Approval (Date) _____
Construction Period (From) _____ (To) _____
As-Builts (Date) _____

CRW ENGINEERING GROUP, LLC
3940 Arctic Blvd. Suite 300
Anchorage, Alaska 99503
PHONE: (907) 562-3252
#AKCL882-AK

Gray Stassel Engineering, Inc.
P.O. 111405, Anchorage, AK 99511 (907)349-0100

STATE OF ALASKA
49TH
CLOIS W. VERSTEEG
EE 7802
08/27/2018
REGISTERED PROFESSIONAL ENGINEER

Sheet No. G1.1

SHEET INDEX

ELECTRICAL			
G1.1	COVER SHEET	–	
G1.2	SCHEDULE OF DRAWINGS	–	1
E1.0	ELECTRICAL LEGEND & ABBREVIATIONS, SPECIFICATIONS & BILL OF MATERIAL	–	1
E1.1	TOGIAK–TWIN HILLS INTERTIE ONE–LINE DIAGRAM	–	
E2.0	TWIN HILLS OVERVIEW	–	
E2.1	TWIN HILLS DEMOLITION PLAN (1 of 7)	ADDITIVE ALTERNATE A	
E2.2	TWIN HILLS DEMOLITION PLAN (2 of 7)	ADDITIVE ALTERNATE A	
E2.3	TWIN HILLS DEMOLITION PLAN (3 of 7)	ADDITIVE ALTERNATE A	
E2.4	TWIN HILLS DEMOLITION PLAN (4 of 7)	ADDITIVE ALTERNATE A	
E2.5	TWIN HILLS DEMOLITION PLAN (5 of 7)	ADDITIVE ALTERNATE A	
E2.6	TWIN HILLS DEMOLITION PLAN (6 of 7)	ADDITIVE ALTERNATE A	
E2.7	TWIN HILLS DEMOLITION PLAN (7 of 7)	ADDITIVE ALTERNATE A	
E3.1	TWIN HILLS DISTRIBUTION PLAN (1 of 13)	ADDITIVE ALTERNATE A,B	
E3.2	TWIN HILLS DISTRIBUTION PLAN (2 of 13)	ADDITIVE ALTERNATE A,C	
E3.3	TWIN HILLS DISTRIBUTION PLAN (3 of 13)	ADDITIVE ALTERNATE A	
E3.4	TWIN HILLS DISTRIBUTION PLAN (4 of 13)	ADDITIVE ALTERNATE A	
E3.5	TWIN HILLS DISTRIBUTION PLAN (5 of 13)	ADDITIVE ALTERNATE A	
E3.6	TWIN HILLS DISTRIBUTION PLAN (6 of 13)	ADDITIVE ALTERNATE A	
E3.7	TWIN HILLS DISTRIBUTION PLAN (7 of 13)	ADDITIVE ALTERNATE A	
E3.8	TWIN HILLS DISTRIBUTION PLAN (8 of 13)	ADDITIVE ALTERNATE C	
E3.9	TWIN HILLS DISTRIBUTION PLAN (9 of 13)	ADDITIVE ALTERNATE C	
E3.10	TWIN HILLS DISTRIBUTION PLAN (10 of 13)	ADDITIVE ALTERNATE C	
E3.11	TWIN HILLS DISTRIBUTION PLAN (11 of 13)	ADDITIVE ALTERNATE C	
E3.12	TWIN HILLS DISTRIBUTION PLAN (12 of 13)	ADDITIVE ALTERNATE C	
E3.13	TWIN HILLS DISTRIBUTION PLAN (13 of 13)	ADDITIVE ALTERNATE C	
E4.0	INTERTIE OVERVIEW	–	
E4.1	INTERTIE PLAN (1 of 7)	BID ITEM 1	
E4.2	INTERTIE PLAN (2 of 7)	BID ITEM 1	
E4.3	INTERTIE PLAN (3 of 7)	BID ITEM 1	
E4.4	INTERTIE PLAN (4 of 7)	BID ITEM 1	
E4.5	INTERTIE PLAN (5 of 7)	BID ITEM 1	
E4.6	INTERTIE PLAN (6 of 7)	BID ITEM 1	
E4.7	INTERTIE PLAN (7 of 7)	BID ITEM 1	
E5.1	DETAILS	–	1
E5.2	DETAILS	–	1
E5.3	TOGIAK RIVER CROSSING DETAILS (1 of 2)	BID ITEM 1	
E5.4	TOGIAK RIVER CROSSING DETAILS (2 of 2)	BID ITEM 1	1
E5.5	TOGIAK RIVER CROSSING POLE DETAILS (1 of 2)	BID ITEM 1	
E5.6	TOGIAK RIVER CROSSING POLE DETAILS (2 of 2)	BID ITEM 1	
E5.7	EAST CHANNEL TOGIAK RIVER CROSSING	BID ITEM 1	
E6.1	STANDBY MODULE SITE PLAN	ADDITIVE ALTERNATE B	
E6.2	STANDBY MODULE ENLARGED SITE PLAN & DETAILS	ADDITIVE ALTERNATE B	
E6.3	STANDBY MODULE POWER PLAN & DETAILS	ADDITIVE ALTERNATE B	
E6.4	STANDBY MODULE POWER PLAN & DETAILS	ADDITIVE ALTERNATE B	
E6.5	STANDBY MODULE STATION SERVICE PLANS	ADDITIVE ALTERNATE B	

SHEET INDEX

E6.6	STANDBY MODULE ELECTRICAL DETAILS	ADDITIVE ALTERNATE B	
E7.1	STANDBY MODULE ONE LINE DIAGRAM	ADDITIVE ALTERNATE B	
E7.2	STANDBY MODULE SWITCHGEAR LAYOUT & DETAILS	ADDITIVE ALTERNATE B	
E7.3	STANDBY MODULE ENGINE PANEL LAYOUT & DETAILS	ADDITIVE ALTERNATE B	
E8.1	TWIN HILLS TO TOGIAK COMMUNICATION RISER DIAGRAM	ADDITIVE ALTERNATE B	
E8.2	TOGIAK POWER PLANT SITE PLAN	ADDITIVE ALTERNATE B	
CIVIL			
C1.1	CIVIL NOTES, LEGEND & ABBREVIATIONS	–	
C1.2	STANDBY MODULE CIVIL SITE PLAN	ADDITIVE ALTERNATE B	
C1.3	FENCE & BOLLARD DETAILS	ADDITIVE ALTERNATE B	
STRUCTURAL			
S1	STANDBY MODULE FOUNDATION PLAN & DETAILS	ADDITIVE ALTERNATE B	1
S2.1	STANDBY MODULE CONNEX FLOOR PLANS, SECTIONS, & DETAILS	ADDITIVE ALTERNATE B	
S2.2	STANDBY MODULE CONNEX ROOF PLAN & DETAILS	ADDITIVE ALTERNATE B	
S3	STANDBY MODULE TRUSS ROOF PLAN & DETAILS	ADDITIVE ALTERNATE B	
S4	INTERTIE PILE DETAILS	ADDITIVE ALTERNATE B	1
S5	STAIR DETAILS	ADDITIVE ALTERNATE B	
ARCHITECTURAL			
A1	STANDBY MODULE CONNEX FLOOR PLANS, SECTIONS, DETAILS & CODE ANALYSIS	ADDITIVE ALTERNATE B	
A2.1	STANDBY MODULE EXTERIOR ELEVATIONS	ADDITIVE ALTERNATE B	
A2.2	STANDBY MODULE DOOR DETAILS & SCHEDULE	ADDITIVE ALTERNATE B	
A3	STANDBY MODULE ROOF PLAN & DETAILS	ADDITIVE ALTERNATE B	
MECHANICAL			
M1.1	STANDBY MODULE MECHANICAL LEGEND, SCHEDULES, & SEQUENCE OF OPERATION	ADDITIVE ALTERNATE B	
M1.2	STANDBY MODULE MECHANICAL SITE PLAN & DETAILS	ADDITIVE ALTERNATE B	
M1.3	STANDBY MODULE FIRE EXTINGUISHER, WARNING SIGN & INFORMATIONAL PLACARD PLAN	ADDITIVE ALTERNATE B	
M2	STANDBY MODULE EQUIPMENT LAYOUT PLAN, SECTIONS, & DETAILS	ADDITIVE ALTERNATE B	
M3.1	STANDBY MODULE EQUIPMENT LAYOUT PLAN, SECTIONS, & DETAILS	ADDITIVE ALTERNATE B	
M3.2	STANDBY MODULE SECTIONS, ELEVATIONS, & DETAILS	ADDITIVE ALTERNATE B	
M3.3	STANDBY MODULE MECHANICAL DETAILS	ADDITIVE ALTERNATE B	
M4	STANDBY MODULE COOLANT PIPING	ADDITIVE ALTERNATE B	
M5.1	STANDBY MODULE FUEL PIPING PLAN & DETAILS	ADDITIVE ALTERNATE B	
M5.2	STANDBY MODULE FUEL OIL DAY TANK FABRICATION	ADDITIVE ALTERNATE B	
M6	STANDBY MODULE EXHAUST & CRANK VENT PIPING	ADDITIVE ALTERNATE B	
M7	STANDBY MODULE VENTILATION & SHEET METAL FABRICATIONS	ADDITIVE ALTERNATE B	

State of Alaska
Department of Commerce, Community and Economic Development
AIDEA/AEA
Rural Energy Group
813 West Northern Lights Blvd.
Anchorage, Alaska 99503
ALASKA ENERGY AUTHORITY

STATE OF ALASKA 49TH CLOIS W. VERSTEEG EE 7802 08/27/2018 REGISTERED PROFESSIONAL ENGINEER

Gray Stassel Engineering, Inc.
P.O. 111405, Anchorage, AK 99511 (907)349-0100

CRW ENGINEERING GROUP, LLC
3940 ARCTIC BLVD. SUITE 300
ANCHORAGE, ALASKA 99503
PHONE: (907) 562-3252
#AECL882-AK

TWIN HILLS, ALASKA
RURAL POWER SYSTEM UPGRADE
SHEET INDEX

NO.	REVISION	BY	DATE
0	ISSUED FOR CONSTRUCTION	TRK	8/2018
1	SHEET REVISED PER ADDENDA 1	TRK	10/2018

Plot Date 10/2/18
Designed CWV
Drawn TRK
Approved CWV

Sheet No. G1.2

File: J:\JobsData\30404.09 Twin Hills RPSU\00 CADD\01 Working Set\01 Civil\30404.09 COVER.dwg

GENERAL NOTES

1. ALL CONSTRUCTION WORK SHALL BE DONE IN ACCORDANCE WITH THE STAKING SHEETS, NOTES TO STAKING SHEETS, SPECIFICATIONS, AND THE CONSTRUCTION DRAWINGS.

2. THE EXISTING TWIN HILLS DISTRIBUTION SYSTEM IS A LOW VOLTAGE OVERHEAD SYSTEM OPERATING AT 120/240 VOLTS, 1ϕ. THE EXISTING SYSTEM WILL BE REPLACED WITH AN OVERHEAD PRIMARY SYSTEM THAT WILL OPERATE AT 12.47/7.2 KV, 3ϕ. THE EXISTING SYSTEM SHALL STAY IN SERVICE UNTIL THE NEW SERVICE IS OPERATIONAL AND ALL SERVICES HAVE BEEN TRANSFERRED.

3. THE 2007 EDITION OF ANSI C2 – NATIONAL ELECTRICAL SAFETY CODE (NESC), RUS BULLETIN 1728F–804, SPECIFICATIONS AND DRAWINGS FOR 12.47/7.2 kV LINE CONSTRUCTION, UNLESS MODIFIED BY THESE DRAWINGS OR SPECIFICATIONS, SHALL BE FOLLOWED, INCLUDING ANY STATE OF ALASKA AMENDMENTS. OBTAIN COPIES OF THE RUS BULLETINS AND MAINTAIN COPIES ON THE JOB SITE. ADDITIONALLY, CONSTRUCTION SPECIFICATIONS ARE INCLUDED IN DIVISIONS 26 AND 33 OF THE CONSTRUCTION DOCUMENTS. CONTRACTOR SHALL BE THOROUGHLY FAMILIAR WITH THE CONTRACT DOCUMENTS, RUS CONSTRUCTION UNITS, AND ANSI C2.

4. THE EXISTING ELECTRICAL DISTRIBUTION SYSTEM CURRENTLY SERVES CUSTOMERS. SERVICE SHALL BE MAINTAINED AT ALL TIMES TO THE CUSTOMERS EXCEPT WHEN OUTAGES ARE REQUIRED FOR SERVICE CONVERSION OR OTHER CONSTRUCTION RELATED ACTIVITIES. ALL OUTAGES SHALL BE COORDINATED IN ADVANCE WITH TWIN HILLS. PRIOR TO COMMENCING WORK ON THE UPGRADE, MEET WITH TWIN HILLS TO DEVELOP AN OUTAGE SCHEDULE THAT WILL KEEP DISRUPTIONS OF POWER TO THE CUSTOMERS TO A MINIMUM. TWIN HILLS SHALL HAVE FINAL AUTHORITY ON WHEN OUTAGES CAN OCCUR.

5. THE EXISTING ELECTRICAL DISTRIBUTION SYSTEM POLES ARE SHARED WITH THE TELEPHONE SYSTEM, UNITED UTILITY INC. CONTRACTOR SHALL NOT DISRUPT THE EXISTING TELEPHONE SYSTEM WITHOUT THE CONSENT OF THE TELEPHONE COMPANY. ANY PART OF THE EXISTING TELEPHONE SYSTEM DAMAGED BY THE CONTRACTOR SHALL BE REPAIRED OR REPLACED AS DIRECTED BY THE TELEPHONE COMPANY.

6. UNLESS OTHERWISE INDICATED, THE SECONDARY DISTRIBUTION SYSTEM, INCLUDING HARDWARE, CONDUCTORS, CROSSARMS, INSULATORS, LIGHTS, ANCHOR RODS, GUYS, AND ALL OTHER MATERIAL DIRECTLY RELATED TO THE EXISTING ELECTRICAL DISTRIBUTION SYSTEM SHALL BE REMOVED AFTER COMPLETION OF THE INSTALLATION, ENERGIZATION, AND SERVICE CONVERSIONS TO THE NEW ELECTRICAL DISTRIBUTION SYSTEM. POLES THAT HAVE TELEPHONE SYSTEM CONDUCTORS OR EQUIPMENT ATTACHED SHALL NOT BE REMOVED.

7. ALL EXISTING UTILITIES MAY NOT BE SHOWN. CONTRACTOR SHALL LOCATE ALL UNDERGROUND UTILITIES PRIOR TO DRIVING ANY PILES OR DRILLING ANY ANCHORS. COORDINATE WITH TWIN HILLS TO LOCATE UNDERGROUND UTILITIES.

8. THE DRAWINGS ARE DIAGRAMMATIC AND DO NOT NECESSARILY SHOW ALL FEATURES OF THE REQUIRED WORK. PROVIDE ALL EQUIPMENT AND MATERIALS REQUIRED FOR A COMPLETE SYSTEM. VERIFY EXISTING FIELD CONDITIONS PRIOR TO STARTING CONSTRUCTION. IMMEDIATELY CONTACT THE ENGINEER FOR CLARIFICATION OF QUESTIONABLE ITEMS OR APPARENT CONFLICTS.

9. ENSURE THAT APPROPRIATE SAFETY MEASURES ARE IMPLEMENTED AND THAT ALL WORKERS ARE AWARE OF THE POTENTIAL HAZARDS FROM ELECTRICAL SHOCK ASSOCIATED WITH WORKING ON OR NEAR AN ENERGIZED MEDIUM VOLTAGE DISTRIBUTION SYSTEM.

10. THE SITE DRAWINGS USED WERE DEVELOPED USING A COMBINATION OF AERIAL PHOTOGRAPHY AND SURVEY DATA PROVIDED BY OTHERS. ANY VARIATIONS BETWEEN WHAT IS SHOWN AND THE ACTUAL FIELD CONDITIONS SHALL BE BROUGHT TO THE ATTENTION OF THE ENGINEER.

11. SEE CONSTRUCTION SPECIFICATIONS FOR ADDITIONAL INFORMATION.

SCOPE OF WORK

1. THE PURPOSE OF THIS PROJECT IS TO REPLACE THE EXISTING ELECTRICAL DISTRIBUTION SYSTEM IN TWIN HILLS, ALASKA, PROVIDE A NEW INTERTIE BETWEEN TOGIAK AND TWIN HILLS AND TO PROVIDE A NEW STANDBY POWERHOUSE IN TWIN HILLS, ALASKA.

2. THE LIMIT OF CONSTRUCTION FOR THE NEW ELECTRICAL DISTRIBUTION SYSTEM IS THE CONNECTION TO THE EXISTING SERVICE MASTS AT THE VARIOUS SERVICES. THE CONTRACTOR SHALL REMOVE THE EXISTING SECONDARY SERVICE DROP CONDUCTORS, UNLESS OTHERWISE INDICATED ON THE DRAWINGS, AND INSTALL NEW SERVICE CONDUCTORS TO EACH SERVICE. THE EXISTING METER BASE OR SERVICE MAST WILL NOT BE THE RESPONSIBILITY OF THE CONTRACTOR EXCEPT FOR PROVIDING DEADEND ASSEMBLIES AND MAKING THE CONNECTION TO THE EXISTING SERVICE ENTRANCE CONDUCTORS AT THE SERVICE MAST. IF THE EXISTING SERVICE MAST IS NOT IN SATISFACTORY CONDITION TO SUPPORT THE NEW SERVICE, THE CONTRACTOR SHALL NOTIFY TWIN HILLS FOR RESOLUTION. THE CONTRACTOR SHALL NOTIFY TWIN HILLS FAR ENOUGH IN ADVANCE TO ALLOW TWIN HILLS TIME TO REPAIR OR REPLACE THE SERVICE MAST.

LEGEND

EXISTING SINGLE PHASE OVERHEAD PRIMARY	NEW SINGLE PHASE OVERHEAD PRIMARY
EXISTING 3–PHASE OVERHEAD PRIMARY	NEW 3–PHASE OVERHEAD PRIMARY
EXISTING UNDERGROUND	NEW UNDERGROUND
EXISTING SECONDARY*	NEW SECONDARY*
	ELECTRICAL POLE
EXISTING TWIN HILLS STUB POLE	STUB POLE
EXISTING UUI STUB POLE	
	TRANSFORMER XX=SIZE
EXISTING GUY	NEW GUY
EXISTING LIGHT	NEW LIGHT
EXISTING EASEMENT (BOARDWALK OR UTILITY)	

*SINGLE PHASE UNLESS NOTED ON THE DRAWINGS

ELECTRICAL EQUIPMENT SCHEDULE

ITEM NO.	DESCRIPTION	MANUFACTURER
1	STREET LIGHT, LED TYPE, POLE MOUNTED WITH ARM AND ATTACHMENTS. TYPE III LIGHT DISTRIBUTION. PROVIDE 2–1/2' LONG GALVANIZED, 2" PIPE TENON CANTILEVER ARM SUITABLE FOR WOOD POLES. 120 VOLTS. PHOTO ELECTRIC CONTROL.	AMERICAN ELECTRIC LIGHTING CAT. No. ATB0 20BLEDE53 MVOLT R3 PCSS LITHONIA SMAWT20US2–5 GALV TENON ARM
2	LED STEADY LIGHT, GREEN, 120V, NEMA 4X, WITH WALL BRACKET MOUNTING ELBOW. SET LIGHT FOR STEADY ON.	EDWARDS SIGNALING CAT No. 166EXMLEDG–Y6

METER SCHEDULE

ITEM NO.	SERVICE DESCRIPTION	METER & BASE SPECIFICATION
M1	120/240V SINGLE PHASE SERVICE FROM SINGLE PHASE TRANSFORMER	EXISTING 100 AMP METER BASE. FORM 2S DIRECT READ WITH DISCONNECT. ELSTER REX2D CAT. NO. ZFCWM0000
M2	120/240V SINGLE PHASE SERVICE FROM SINGLE PHASE TRANSFORMER	120/240V SINGLE PHASE, THREE WIRE, 100 AMP, 4–JAW METER BASE, 100 AMP, OVERHEAD SERVICE, 100 AMP, 2–POLE MAIN CIRCUIT BREAKER. FORM 2S DIRECT READ WITH DISCONNECT. ELSTER REX2D CAT. NO. ZFCWM0000
M3	120/240V SINGLE PHASE SERVICE FROM SINGLE PHASE TRANSFORMER	120/240V SINGLE PHASE, THREE WIRE INSTRUMENT RATED. 8–JAW METER SOCKET, MILBANK UC7235–XL WITH AUTOMATIC PLUNGER BYPASS, NO ALTERNATE. PROVIDE ELSTER FORM 5S METER CAT. NO. ZD2210P8082.

State of Alaska
Department of Commerce, Community and Economic Development
AIDEA/AEA
Rural Energy Group
813 West Northern Lights Blvd.
Anchorage, Alaska 99503
ALASKA ENERGY AUTHORITY

STATE OF ALASKA 49TH
CLOIS W. VERSTEEG
EE 7802
08/27/2018
REGISTERED PROFESSIONAL ENGINEER

Gray Stassel Engineering, Inc.
P.O. 111405, Anchorage, AK 99511 (907)349-0100

CRW ENGINEERING GROUP, LLC
3940 ARCTIC BLVD. SUITE 300
ANCHORAGE, ALASKA 99503
PHONE: (907) 562–3252
#AECL882–AK

TWIN HILLS, ALASKA

RURAL POWER SYSTEM UPGRADE

LEGEND & ABBREVIATIONS, SPECIFICATIONS & BILL OF MATERIAL

NO.	REVISION	BY	DATE
0	ISSUED FOR CONSTRUCTION	TRK	8/2018
1	REVISED PER ADDENDA	TRK	10/2018

Plot Date 10/2/18
Designed CWV
Drawn TRK
Approved CWV

Sheet No. E1.0

File: J:\JobsData\30404.09 Twin Hills RPSU\00 CADD\01 Working Set\03 Electrical\30404.09-TWIN HILLS RPSU.dwg

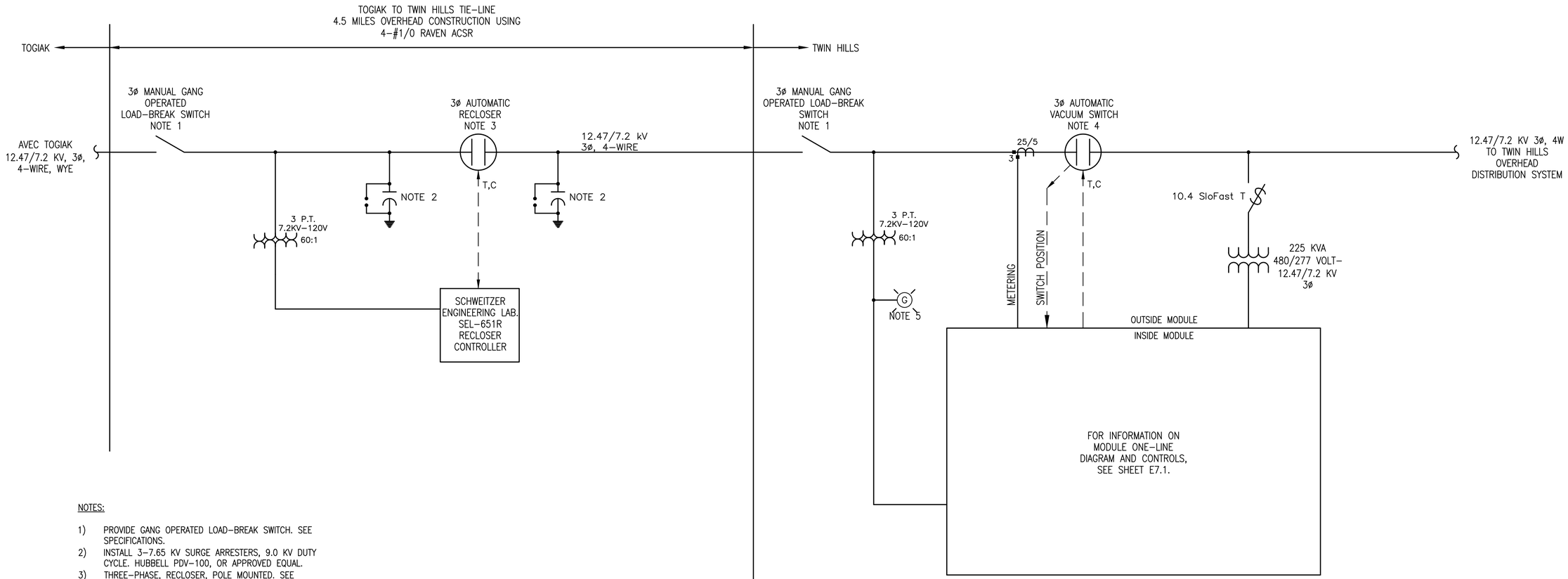

NOTES:

1) PROVIDE GANG OPERATED LOAD-BREAK SWITCH. SEE SPECIFICATIONS.
2) INSTALL 3-7.65 KV SURGE ARRESTERS, 9.0 KV DUTY CYCLE. HUBBELL PDV-100, OR APPROVED EQUAL.
3) THREE-PHASE, RECLOSER, POLE MOUNTED. SEE SPECIFICATIONS.
4) THREE-PHASE VACUUM SWITCH, POLE MOUNTED. SEE SPECIFICATIONS.
5) GREEN LED LIGHT TO INDICATE WHEN POWER FROM TOGIAK IS AVAILABLE.

State of Alaska
Department of Commerce, Community and Economic Development
AIDEA/AEA
Rural Energy Group
813 West Northern Lights Blvd.
Anchorage, Alaska 99503
ALASKA ENERGY AUTHORITY

STATE OF ALASKA
49TH
CLOIS W. VERSTEEG
EE 7802
08/27/2018
REGISTERED PROFESSIONAL ENGINEER

Gray Stassel Engineering, Inc.
P.O. 111405, Anchorage, AK 99511 (907)349-0100

CRW ENGINEERING GROUP, LLC
3940 ARCTIC BLVD. SUITE 300
ANCHORAGE, ALASKA 99503
PHONE: (907) 562-3252
#AECL882-AK

TWIN HILLS, ALASKA

RURAL POWER
SYSTEM UPGRADE

TOGIAK-TWIN HILL INTERTIE
ONE-LINE DIAGRAM

NO.	REVISION	BY	DATE
0	ISSUED FOR CONSTRUCTION	TRK	8/2018

Plot Date 10/2/18
Designed CWV
Drawn TRK
Approved CWV

Sheet No. E1.1

File: J:\JobsData\30404.09 Twin Hills RPSU\00 CADD\01 Working Set\03 Electrical\30404.09-TWIN HILLS RPSU.dwg

State of Alaska
Department of Commerce, Community and Economic Development
AIDEA/AEA
Rural Energy Group
813 West Northern Lights Blvd.
Anchorage, Alaska 99503

STATE OF ALASKA
49TH
CLOIS W. VERSTEEG
EE 7802
08/27/2018
REGISTERED PROFESSIONAL ENGINEER

Gray Stassel Engineering, Inc.
P.O. 111405, Anchorage, AK 99511 (907)349-0100

CRW ENGINEERING GROUP, LLC
3940 ARCTIC BLVD. SUITE 300
ANCHORAGE, ALASKA 99503
PHONE: (907) 562-3252
#AECL882-AK

TWIN HILLS, ALASKA
RURAL POWER SYSTEM UPGRADE
TWIN HILLS DISTRIBUTION OVERVIEW

NO.	REVISION	BY	DATE
0	ISSUED FOR CONSTRUCTION	TRK	8/2018

Plot Date 10/2/18
Designed CWV
Drawn TRK
Approved CWV

Sheet No. E2.0

File: J:\JobsData\30404.09 Twin Hills RPSU\00 CADD\01 Working Set\03 Electrical\30404.09-TWIN HILLS RPSU.dwg

NOTES

1. DEMOLISH ALL EXISTING DISTRIBUTION CONDUCTORS, CROSSARMS, HARDWARE, ETC. TAKEN OUT OF SERVICE AS A RESULT OF THIS PROJECT EXCEPT WHERE SPECIFICALLY INDICATED TO REMAIN. COORDINATE DEMO WORK TO MINIMIZE OUTAGES.
2. EXISTING POLES TO REMAIN EXCEPT WHERE SPECIFICALLY INDICATED TO BE REMOVED.
3. EXISTING TELEPHONE TO REMAIN IN SERVICE ON EXISTING POLES.
4. REMOVE THE EXISTING METER, METER BASE, AND WOODEN RACK. PROTECT THE EXISTING CONDUCTORS FROM THE METER BASE CIRCUIT TO THE TANK FARM FOR RECONNECTION.
5. ALL WORK ON THIS SHEET SHALL BE ADDITIVE ALTERNATE A.

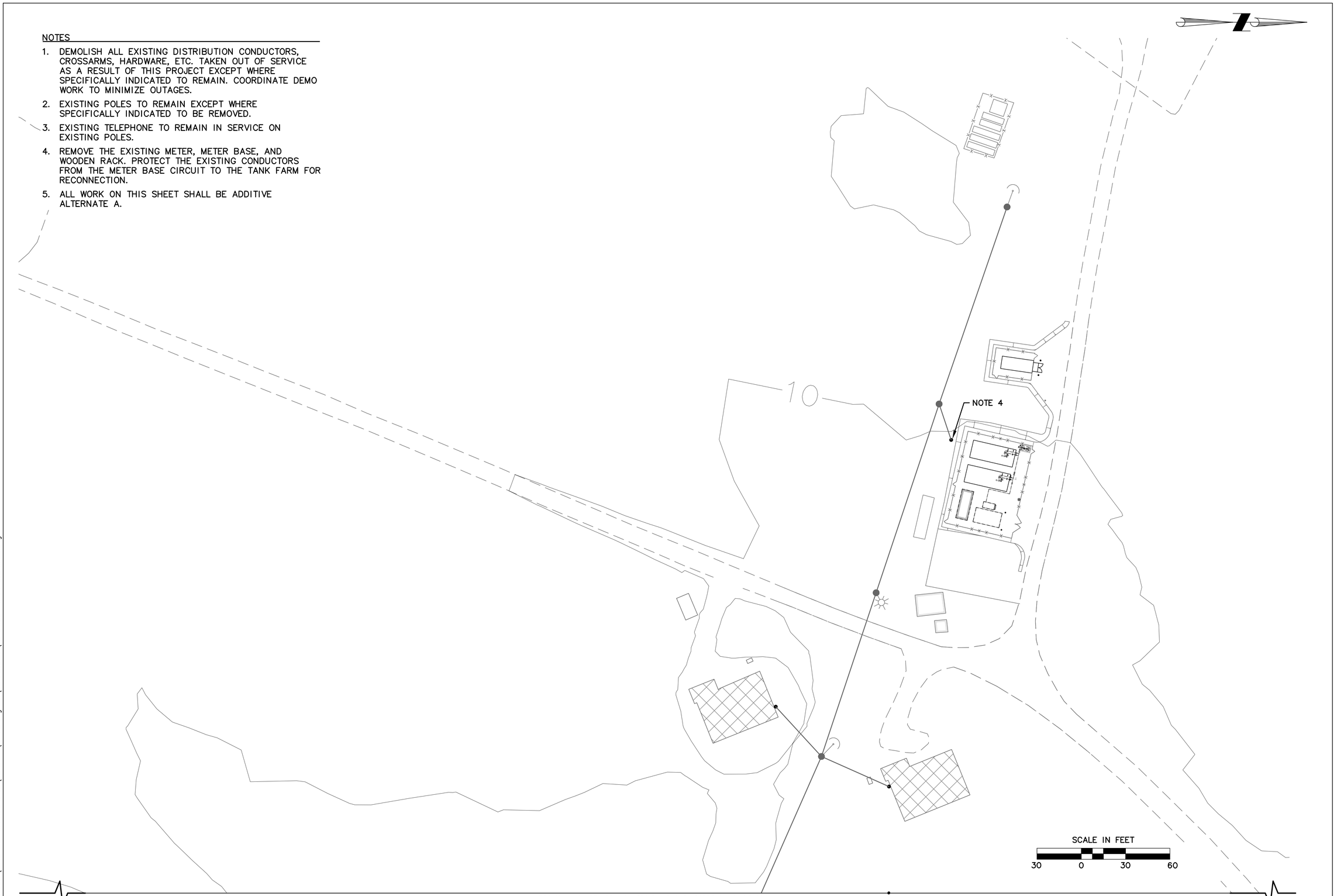

SEE E2.2 FOR MATCH LINE

State of Alaska
Department of Commerce, Community and Economic Development
AIDEA/AEA
Rural Energy Group
813 West Northern Lights Blvd.
Anchorage, Alaska 99503
ALASKA ENERGY AUTHORITY

STATE OF ALASKA 49TH CLOIS W. VERSTEEG EE 7802 REGISTERED PROFESSIONAL ENGINEER 08/27/2018

Gray Stassel Engineering, Inc.
P.O. 111405, Anchorage, AK 99511 (907)349-0100

CRW ENGINEERING GROUP, LLC
3940 ARCTIC BLVD. SUITE 300
ANCHORAGE, ALASKA 99503
PHONE: (907) 562-3252
#AECL882-AK

TWIN HILLS, ALASKA
RURAL POWER SYSTEM UPGRADE
TWIN HILLS DEMOLITION PLAN
(1 of 7)

NO.	REVISION	BY	DATE
0	ISSUED FOR CONSTRUCTION	TRK	8/2018

Plot Date 10/2/18
Designed CWV
Drawn TRK
Approved CWV

Sheet No. E2.1

File: J:\JobsData\30404.09 Twin Hills RPSU\00 CADD\01 Working Set\03 Electrical\30404.09-TWIN HILLS RPSU.dwg

SEE E2.1 FOR MATCH LINE

NOTES

1. DEMOLISH ALL EXISTING DISTRIBUTION CONDUCTORS, CROSSARMS, HARDWARE, ETC. TAKEN OUT OF SERVICE AS A RESULT OF THIS PROJECT EXCEPT WHERE SPECIFICALLY INDICATED TO REMAIN. COORDINATE DEMO WORK TO MINIMIZE OUTAGES.
2. EXISTING POLES TO REMAIN EXCEPT WHERE SPECIFICALLY INDICATED TO BE REMOVED.
3. EXISTING TELEPHONE TO REMAIN IN SERVICE ON EXISTING POLES.
4. ALL WORK ON THIS SHEET SHALL BE ADDITIVE ALTERNATE A.

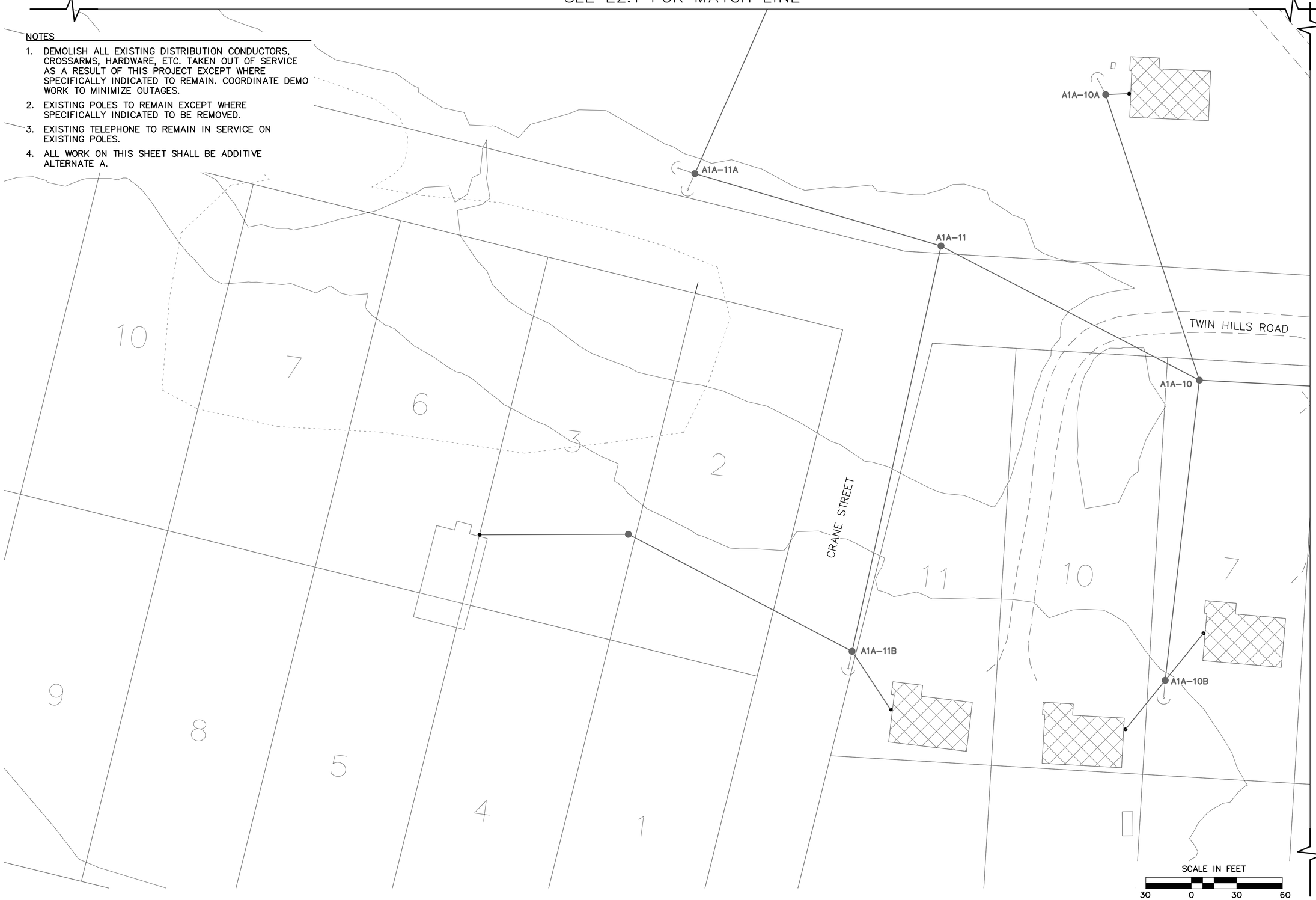

SEE E2.3 FOR MATCH LINE

File: J:\JobsData\30404.09 Twin Hills RPSU\00 CADD\01 Working Set\03 Electrical\30404.09-TWIN HILLS RPSU.dwg

State of Alaska
Department of Commerce, Community and Economic Development
AIDEA/AEA
Rural Energy Group
813 West Northern Lights Blvd.
Anchorage, Alaska 99503
ALASKA ENERGY AUTHORITY

STATE OF ALASKA 49TH REGISTERED PROFESSIONAL ENGINEER CLOIS W. VERSTEEG EE 7802 08/27/2018

Gray Stassel Engineering, Inc.
P.O. 111405, Anchorage, AK 99511 (907)349-0100

CRW ENGINEERING GROUP, LLC
3940 ARCTIC BLVD. SUITE 300
ANCHORAGE, ALASKA 99503
PHONE: (907) 562-3252
#AECL882-AK

TWIN HILLS, ALASKA
RURAL POWER SYSTEM UPGRADE
TWIN HILLS DEMOLITION PLAN (2 of 7)

NO.	REVISION	BY	DATE
0	ISSUED FOR CONSTRUCTION	TRK	8/2018

Plot Date 10/2/18
Designed CWV
Drawn TRK
Approved CWV

Sheet No. E2.2

SEE E2.6 FOR MATCH LINE

SEE E2.5 FOR MATCH LINE

SEE E2.7 FOR MATCH LINE

NOTES

1. DEMOLISH ALL EXISTING DISTRIBUTION CONDUCTORS, CROSSARMS, HARDWARE, ETC. TAKEN OUT OF SERVICE AS A RESULT OF THIS PROJECT EXCEPT WHERE SPECIFICALLY INDICATED TO REMAIN. COORDINATE DEMO WORK TO MINIMIZE OUTAGES.
2. EXISTING POLES TO REMAIN EXCEPT WHERE SPECIFICALLY INDICATED TO BE REMOVED.
3. EXISTING TELEPHONE TO REMAIN IN SERVICE ON EXISTING POLES.
4. ALL WORK ON THIS SHEET SHALL BE ADDITIVE ALTERNATE A.

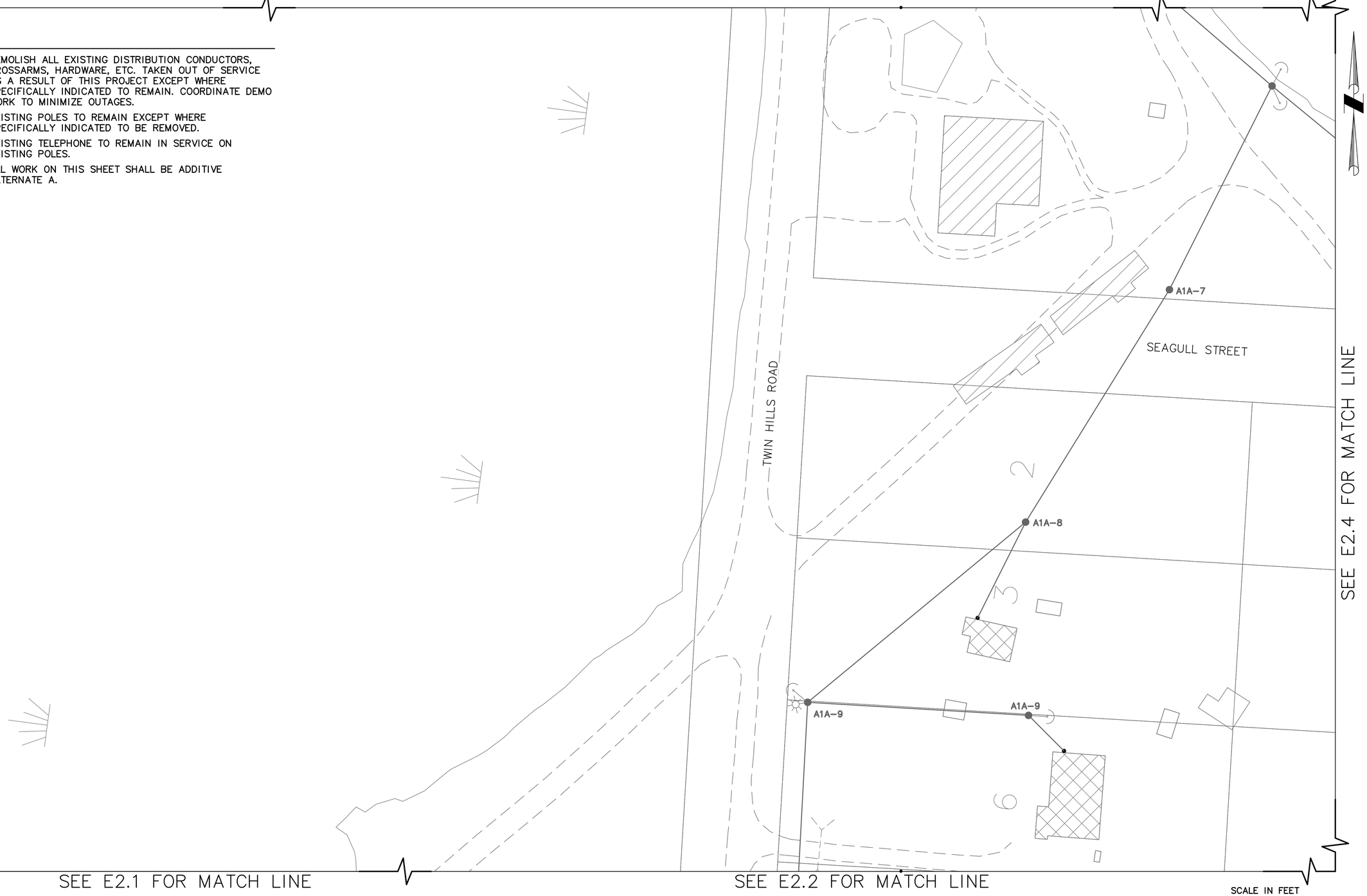

SEE E2.4 FOR MATCH LINE

SEE E2.1 FOR MATCH LINE

SEE E2.2 FOR MATCH LINE

SCALE IN FEET
30 0 30 60

State of Alaska
Department of Commerce, Community and Economic Development
AIDEA/AEA
Rural Energy Group
813 West Northern Lights Blvd.
Anchorage, Alaska 99503
ALASKA ENERGY AUTHORITY

STATE OF ALASKA
49TH
CLOIS W. VERSTEEG
EE 7802
08/27/2018
REGISTERED PROFESSIONAL ENGINEER

Gray Stassel Engineering, Inc.
P.O. 111405, Anchorage, AK 99511 (907)349-0100

CRW ENGINEERING GROUP, LLC
3940 ARCTIC BLVD. SUITE 300
ANCHORAGE, ALASKA 99503
PHONE: (907) 562-3252
#AECL882-AK

TWIN HILLS, ALASKA
RURAL POWER SYSTEM UPGRADE
TWIN HILLS DEMOLITION PLAN (3 of 7)

NO.	REVISION	BY	DATE
0	ISSUED FOR CONSTRUCTION	TRK	8/2018

Plot Date 10/2/18
Designed CWV
Drawn TRK
Approved CWV

Sheet No. E2.3

File: J:\JobsData\30404.09 Twin Hills RPSU\00 CADD\01 Working Set\03 Electrical\30404.09-TWIN HILLS RPSU.dwg

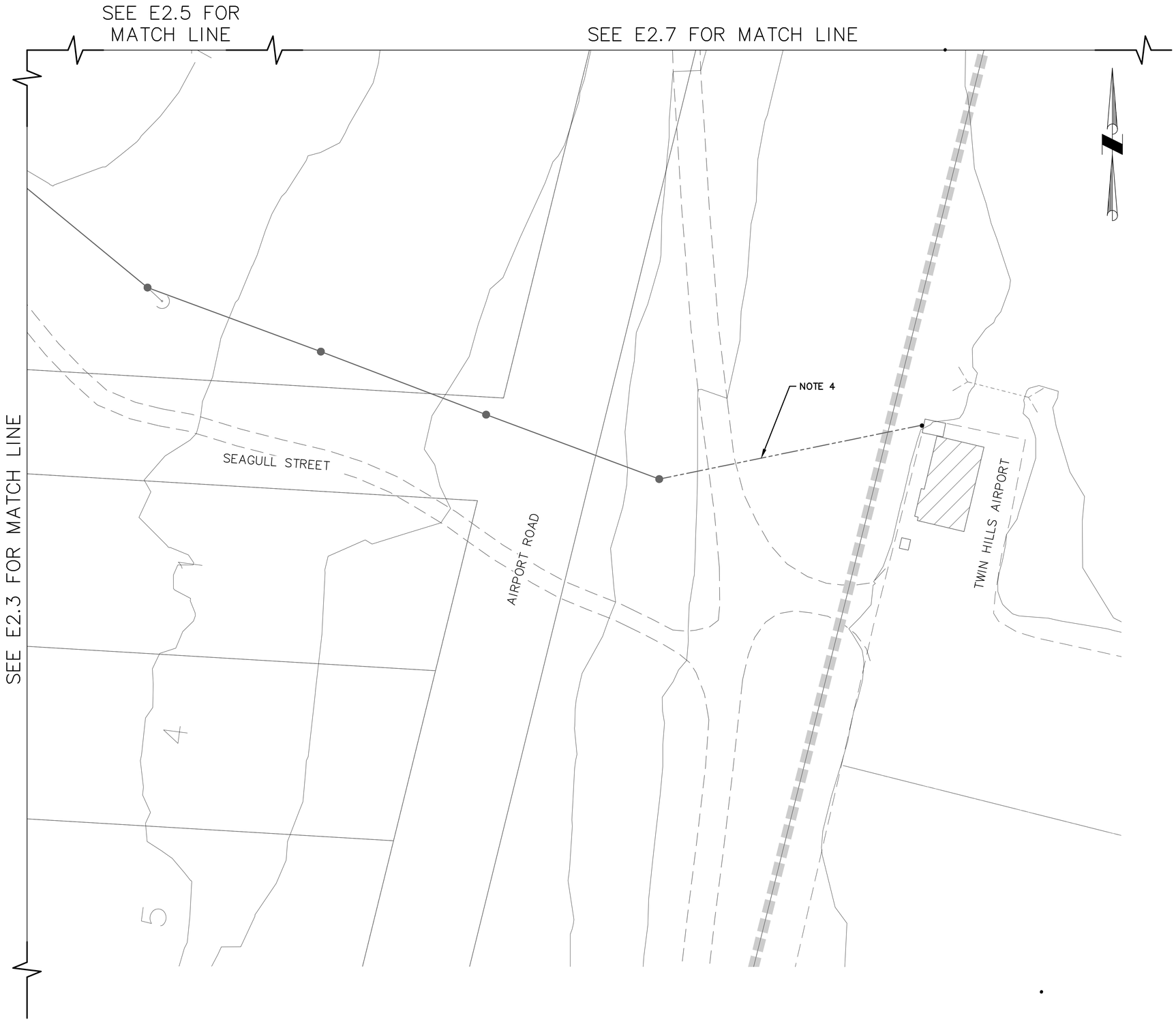

NOTES

1. DEMOLISH ALL EXISTING DISTRIBUTION CONDUCTORS, CROSSARMS, HARDWARE, ETC. TAKEN OUT OF SERVICE AS A RESULT OF THIS PROJECT EXCEPT WHERE SPECIFICALLY INDICATED TO REMAIN. COORDINATE DEMO WORK TO MINIMIZE OUTAGES.
2. EXISTING POLES TO REMAIN EXCEPT WHERE SPECIFICALLY INDICATED TO BE REMOVED.
3. EXISTING TELEPHONE TO REMAIN IN SERVICE ON EXISTING POLES.
4. ABANDON UNDERGROUND TO AIRPORT. REMOVE CONDUCTORS, CONDUIT, AND RISERS.
5. ALL WORK ON THIS SHEET SHALL BE ADDITIVE ALTERNATE A.

SCALE IN FEET

30 0 30 60

State of Alaska
Department of Commerce, Community and Economic Development
AIDEA/AEA
Rural Energy Group
813 West Northern Lights Blvd.
Anchorage, Alaska 99503
ALASKA ENERGY AUTHORITY

STATE OF ALASKA
49TH
CLOIS W. VERSTEEG
EE 7802
08/27/2018
REGISTERED PROFESSIONAL ENGINEER

Gray Stassel Engineering, Inc.
P.O. 111405, Anchorage, AK 99511 (907)349-0100

CRW ENGINEERING GROUP, LLC
3940 ARCTIC BLVD. SUITE 300
ANCHORAGE, ALASKA 99503
PHONE: (907) 562-3252
#AECL882-AK

TWIN HILLS, ALASKA
RURAL POWER SYSTEM UPGRADE
TWIN HILLS DEMOLITION PLAN
(4 of 7)

NO.	REVISION	BY	DATE
0	ISSUED FOR CONSTRUCTION	TRK	8/2018

Plot Date 10/2/18
Designed CWV
Drawn TRK
Approved CWV

Sheet No. E2.4

File: J:\JobsData\30404.09 Twin Hills RPSU\00 CADD\01 Working Set\03 Electrical\30404.09-TWIN HILLS RPSU.dwg

NOTES

1. DEMOLISH ALL EXISTING DISTRIBUTION CONDUCTORS, CROSSARMS, HARDWARE, ETC. TAKEN OUT OF SERVICE AS A RESULT OF THIS PROJECT EXCEPT WHERE SPECIFICALLY INDICATED TO REMAIN. COORDINATE DEMO WORK TO MINIMIZE OUTAGES.
2. EXISTING POLES TO REMAIN EXCEPT WHERE SPECIFICALLY INDICATED TO BE REMOVED.
3. EXISTING TELEPHONE TO REMAIN IN SERVICE ON EXISTING POLES.
4. ALL WORK ON THIS SHEET SHALL BE ADDITIVE ALTERNATE A.

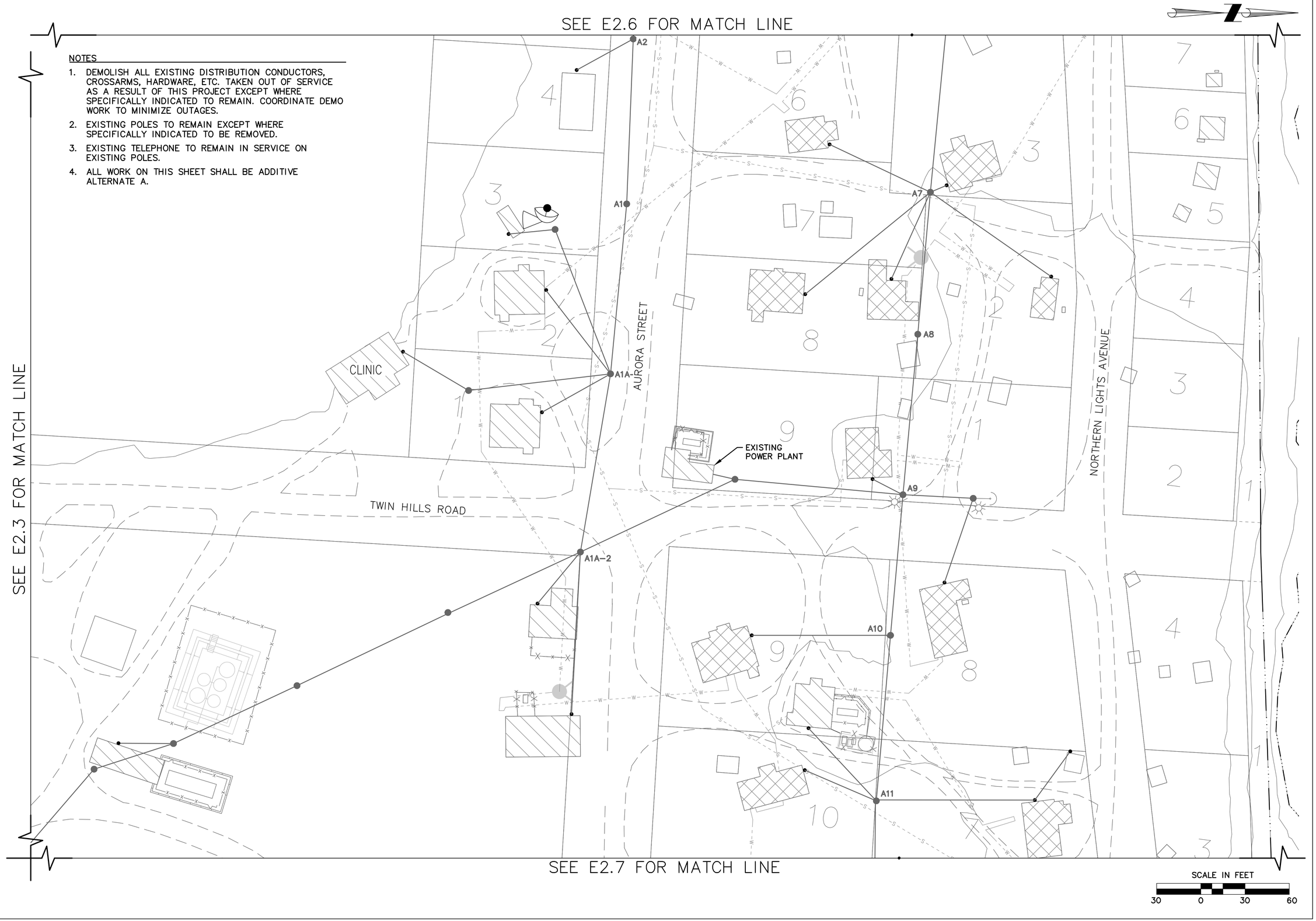

State of Alaska
Department of Commerce, Community and Economic Development
AIDEA/AEA
Rural Energy Group
813 West Northern Lights Blvd.
Anchorage, Alaska 99503

ALASKA ENERGY AUTHORITY

STATE OF ALASKA
49TH
CLOIS W. VERSTEEG
EE 7802
08/27/2018
REGISTERED PROFESSIONAL ENGINEER

Gray Stassel Engineering, Inc.
P.O. 111405, Anchorage, AK 99511 (907)349-0100

CRW ENGINEERING GROUP, LLC
3940 ARCTIC BLVD. SUITE 300
ANCHORAGE, ALASKA 99503
PHONE: (907) 562-3252
#AECL882-AK

TWIN HILLS DEMOLITION PLAN

RURAL POWER SYSTEM UPGRADE

TWIN HILLS DEMOLITION PLAN (5 of 7)

NO.	REVISION	BY	DATE
0	ISSUED FOR CONSTRUCTION	TRK	8/2018

Plot Date 10/2/18
Designed CWV
Drawn TRK
Approved CWV

Sheet No. E2.5

File: J:\JobsData\30404.09 Twin Hills RPSU\00 CADD\01 Working Set\03 Electrical\30404.09-TWIN HILLS RPSU.dwg

NOTES

1. DEMOLISH ALL EXISTING DISTRIBUTION CONDUCTORS, CROSSARMS, HARDWARE, ETC. TAKEN OUT OF SERVICE AS A RESULT OF THIS PROJECT EXCEPT WHERE SPECIFICALLY INDICATED TO REMAIN. COORDINATE DEMO WORK TO MINIMIZE OUTAGES.
2. EXISTING POLES TO REMAIN EXCEPT WHERE SPECIFICALLY INDICATED TO BE REMOVED.
3. EXISTING TELEPHONE TO REMAIN IN SERVICE ON EXISTING POLES.
4. ALL WORK ON THIS SHEET SHALL BE ADDITIVE ALTERNATE A.

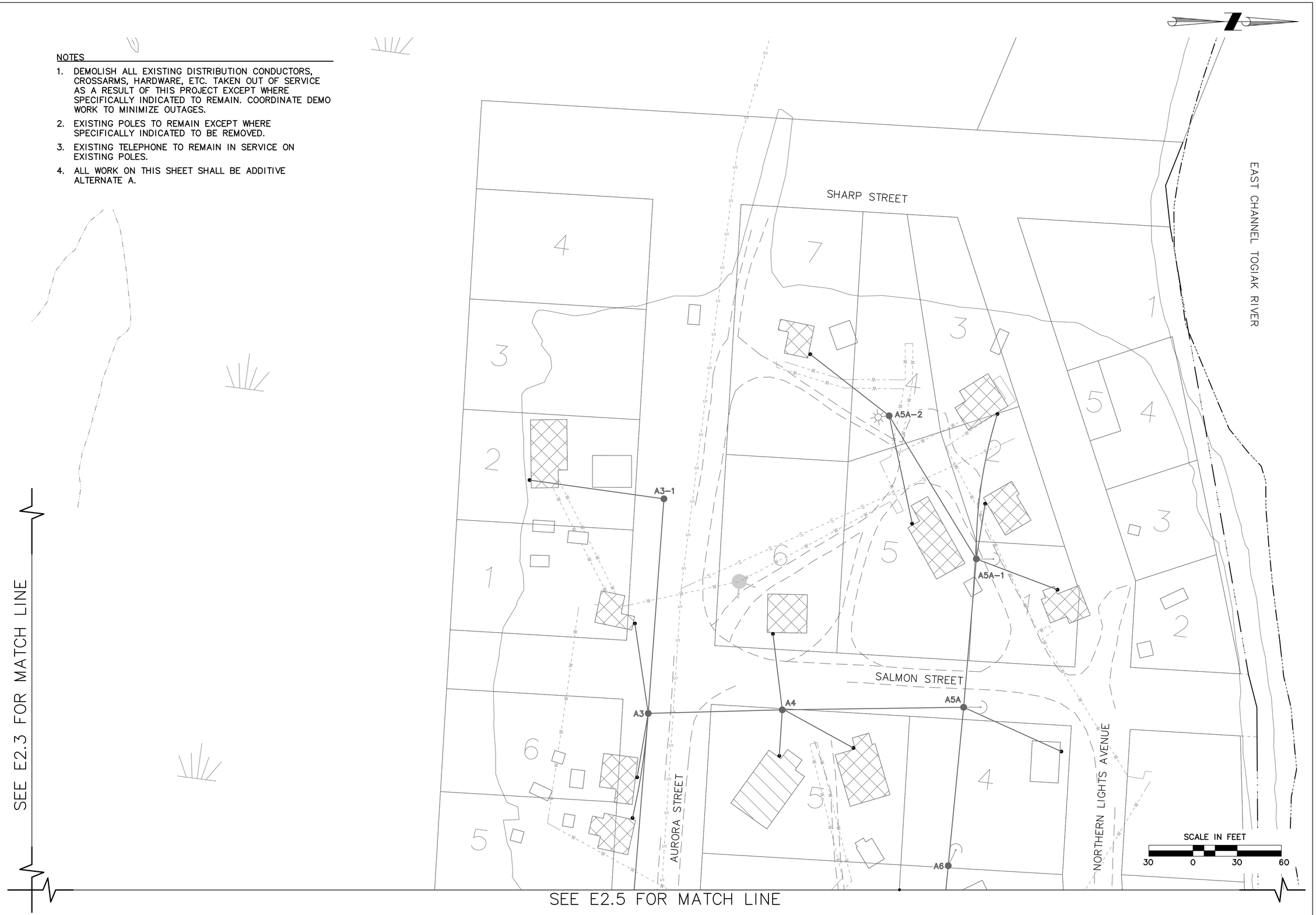

State of Alaska
Department of Commerce, Community and Economic Development
AIDEA/AEA
Rural Energy Group
813 West Northern Lights Blvd.
Anchorage, Alaska 99503
ALASKA ENERGY AUTHORITY

STATE OF ALASKA
49TH
CLOIS W. VERSTEEG
EE 7802
08/27/2018
REGISTERED PROFESSIONAL ENGINEER

Gray Stassel Engineering, Inc.
P.O. 111405, Anchorage, AK 99511 (907)349-0100

CRW ENGINEERING GROUP, LLC
3940 ARCTIC BLVD. SUITE 300
ANCHORAGE, ALASKA 99503
PHONE: (907) 562-3252
#AECL882-AK

TWIN HILLS, ALASKA
RURAL POWER SYSTEM UPGRADE
TWIN HILLS DEMOLITION PLAN
(6 of 7)

NO.	REVISION	BY	DATE
0	ISSUED FOR CONSTRUCTION	TRK	8/2018

Plot Date 10/2/18
Designed CWV
Drawn TRK
Approved CWV

Sheet No. E2.6

File: J:\JobsData\30404.09 Twin Hills RPSU\00 CADD\01 Working Set\03 Electrical\30404.09-TWIN HILLS RPSU.dwg

SEE E2.5 FOR MATCH LINE

NOTES

1. DEMOLISH ALL EXISTING DISTRIBUTION CONDUCTORS, CROSSARMS, HARDWARE, ETC. TAKEN OUT OF SERVICE AS A RESULT OF THIS PROJECT EXCEPT WHERE SPECIFICALLY INDICATED TO REMAIN. COORDINATE DEMO WORK TO MINIMIZE OUTAGES.
2. EXISTING POLES TO REMAIN EXCEPT WHERE SPECIFICALLY INDICATED TO BE REMOVED.
3. EXISTING TELEPHONE TO REMAIN IN SERVICE ON EXISTING POLES.
4. ALL WORK ON THIS SHEET SHALL BE ADDITIVE ALTERNATE A.

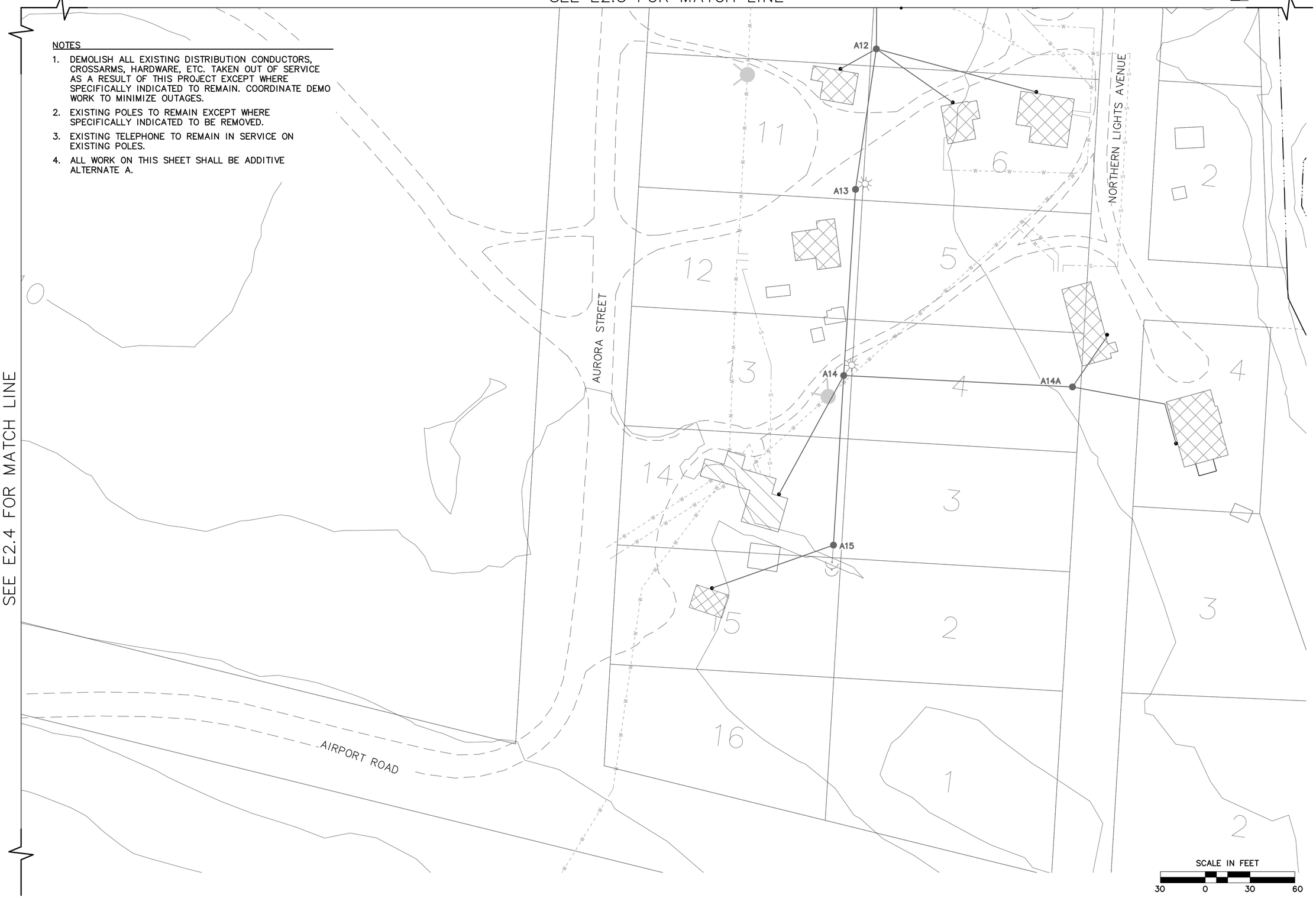

SEE E2.4 FOR MATCH LINE

File: J:\JobsData\30404.09 Twin Hills RPSU\00 CADD\01 Working Set\03 Electrical\30404.09-TWIN HILLS RPSU.dwg

State of Alaska
Department of Commerce, Community and Economic Development
AIDEA/AEA
Rural Energy Group
813 West Northern Lights Blvd.
Anchorage, Alaska 99503
ALASKA ENERGY AUTHORITY

STATE OF ALASKA 49TH REGISTERED PROFESSIONAL ENGINEER CLOIS W. VERSTEEG EE 7802 08/27/2018

Gray Stassel Engineering, Inc.
P.O. 111405, Anchorage, AK 99511 (907)349-0100

CRW ENGINEERING GROUP, LLC
3940 ARCTIC BLVD. SUITE 300
ANCHORAGE, ALASKA 99503
PHONE: (907) 562-3252
#AECL882-AK

TWIN HILLS, ALASKA
RURAL POWER SYSTEM UPGRADE
TWIN HILLS DEMOLITION PLAN
(7 of 7)

NO.	REVISION	BY	DATE
0	ISSUED FOR CONSTRUCTION	TRK	8/2018

Plot Date 10/2/18
Designed CWV
Drawn TRK
Approved CWV

Sheet No. E2.7

NOTES

1. INSTALL NEW METER BASE INDICATED. CONNECT EXISTING TANK FARM FEEDER TO NEW METER CIRCUIT BREAKER. POSITION NEW POLE SUCH THAT THE EXISTING TANK FARM FEEDER IS OF ADEQUATE LENGTH TO REACH THE NEW METER CIRCUIT BREAKER WITH SLACK IN THE CABLE. EXTEND CONDUIT ABOVE GRADE TO METER BASE.
2. ALL WORK ON THIS SHEET IS PART OF ADDITIVE ALTERNATE A UNLESS NOTED.

SEE E3.2 FOR MATCH LINE

File: J:\JobsData\30404.09 Twin Hills RPSU\00 CADD\01 Working Set\03 Electrical\30404.09-TWIN HILLS RPSU.dwg

State of Alaska
Department of Commerce, Community and Economic Development
AIDEA/AEA
Rural Energy Group
813 West Northern Lights Blvd.
Anchorage, Alaska 99503
ALASKA ENERGY AUTHORITY

STATE OF ALASKA 49TH CLOIS W. VERSTEEG EE 7802 REGISTERED PROFESSIONAL ENGINEER 08/27/2018

Gray Stassel Engineering, Inc.
P.O. 111405, Anchorage, AK 99511 (907)349-0100

CRW ENGINEERING GROUP, LLC
3940 ARCTIC BLVD. SUITE 300
ANCHORAGE, ALASKA 99503
PHONE: (907) 562-3252
#AECL882-AK

TWIN HILLS, ALASKA
RURAL POWER SYSTEM UPGRADE
TWIN HILLS DISTRIBUTION PLAN
(1 of 13)

NO.	REVISION	BY	DATE
0	ISSUED FOR CONSTRUCTION	TRK	8/2018

Plot Date 10/2/18
Designed CWV
Drawn TRK
Approved CWV

Sheet No. E3.1

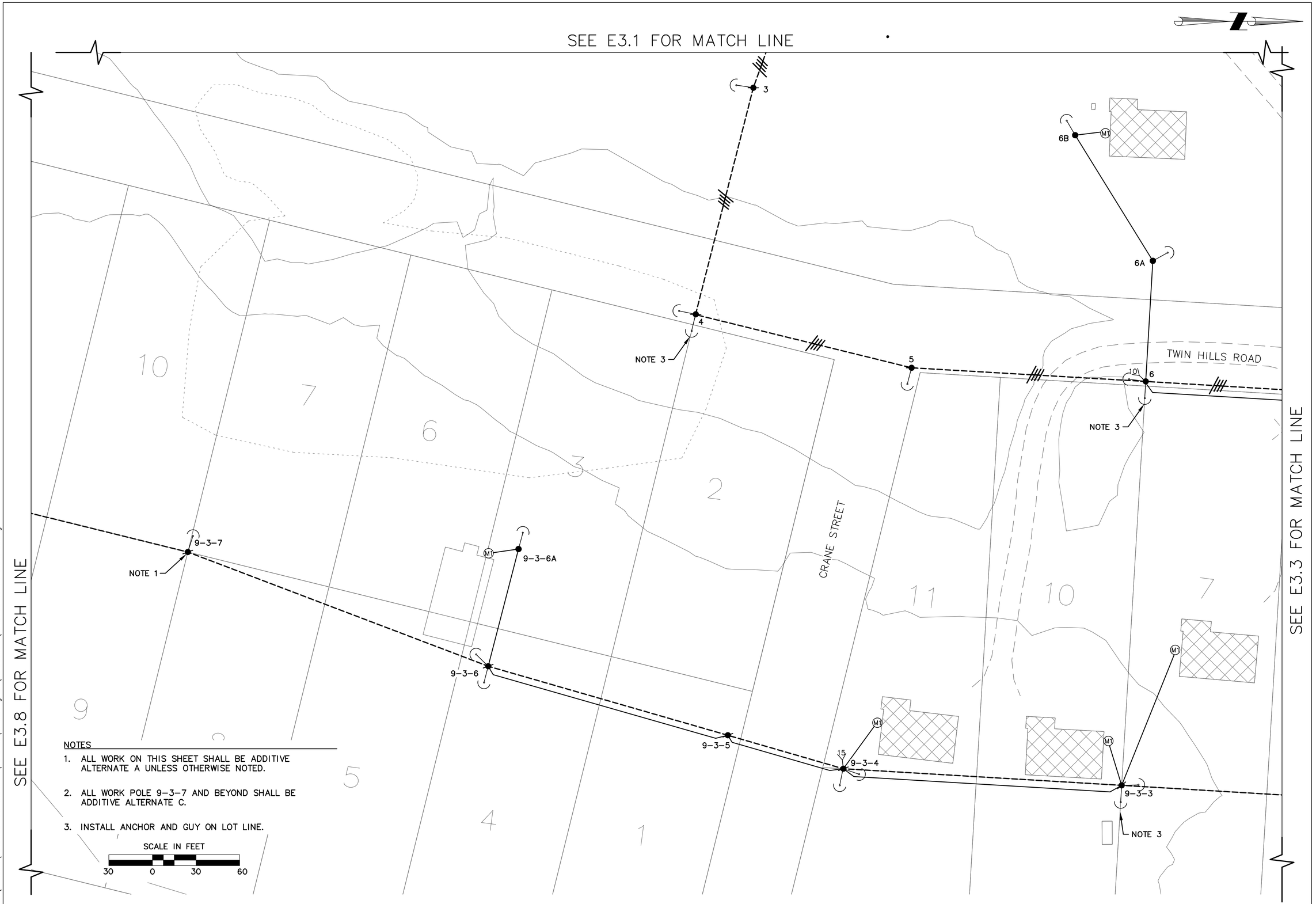

NOTES

1. ALL WORK ON THIS SHEET SHALL BE ADDITIVE ALTERNATE A UNLESS OTHERWISE NOTED.
2. ALL WORK POLE 9-3-7 AND BEYOND SHALL BE ADDITIVE ALTERNATE C.
3. INSTALL ANCHOR AND GUY ON LOT LINE.

SCALE IN FEET

30 0 30 60

State of Alaska
Department of Commerce, Community and Economic Development
AIDEA/AEA
Rural Energy Group
813 West Northern Lights Blvd.
Anchorage, Alaska 99503
ALASKA ENERGY AUTHORITY

STATE OF ALASKA 49TH CLOIS W. VERSTEEG EE 7802 REGISTERED PROFESSIONAL ENGINEER 08/27/2018

Gray Stassel Engineering, Inc.
P.O. 111405, Anchorage, AK 99511 (907)349-0100

CRW ENGINEERING GROUP, LLC
3940 ARCTIC BLVD. SUITE 300
ANCHORAGE, ALASKA 99503
PHONE: (907) 562-3252
#AECL882-AK

TWIN HILLS, ALASKA
RURAL POWER
SYSTEM UPGRADE
TWIN HILLS DISTRIBUTION PLAN
(2 of 13)

NO.	REVISION	BY	DATE
0	ISSUED FOR CONSTRUCTION	TRK	8/2018

Plot Date 10/2/18
Designed CWV
Drawn TRK
Approved CWV

Sheet No. E3.2

File: J:\JobsData\30404.09 Twin Hills RPSU\00 CADD\01 Working Set\03 Electrical\30404.09-TWIN HILLS RPSU.dwg

SEE E3.6 FOR MATCH LINE

SEE E3.5 FOR MATCH LINE

SEE E3.7 FOR MATCH LINE

NOTES

1. INSTALL SLACK SPAN BACK TO LOCATION 9.
2. INSTALL FUSED CUTOUTS AT LOCATION 9–1.
3. ALL WORK ON THIS SHEET SHALL BE ADDITIVE ALTERNATE A.

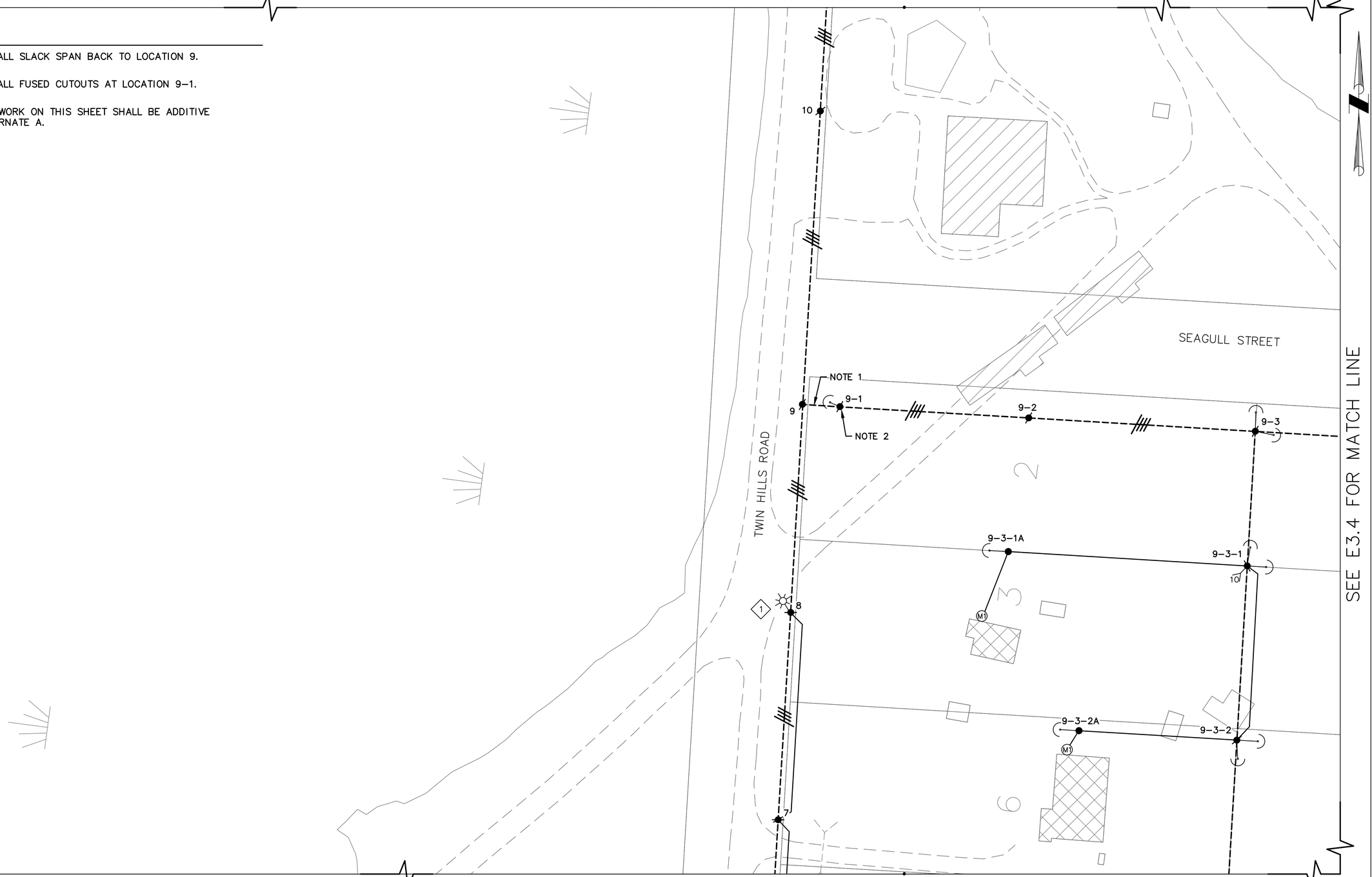

SEE E3.4 FOR MATCH LINE

SEE E3.1 FOR MATCH LINE

SEE E3.2 FOR MATCH LINE

SCALE IN FEET

30 0 30 60

State of Alaska
Department of Commerce, Community and Economic Development
AIDEA/AEA
Rural Energy Group
813 West Northern Lights Blvd.
Anchorage, Alaska 99503
ALASKA ENERGY AUTHORITY

STATE OF ALASKA
49TH
CLOIS W. VERSTEEG
EE 7802
08/27/2018
REGISTERED PROFESSIONAL ENGINEER

Gray Stassel Engineering, Inc.
P.O. 111405, Anchorage, AK 99511 (907)349-0100

CRW ENGINEERING GROUP, LLC
3940 ARCTIC BLVD. SUITE 300
ANCHORAGE, ALASKA 99503
PHONE: (907) 562–3252
#AECL882–AK

TWIN HILLS, ALASKA
RURAL POWER SYSTEM UPGRADE
TWIN HILLS DISTRIBUTION PLAN
(3 of 12)

NO.	REVISION	BY	DATE
0	ISSUED FOR CONSTRUCTION	TRK	8/2018

Plot Date 10/2/18
Designed CWV
Drawn TRK
Approved CWV

Sheet No. E3.3

File: J:\JobsData\30404.09 Twin Hills RPSU\00 CADD\01 Working Set\03 Electrical\30404.09–TWIN HILLS RPSU.dwg

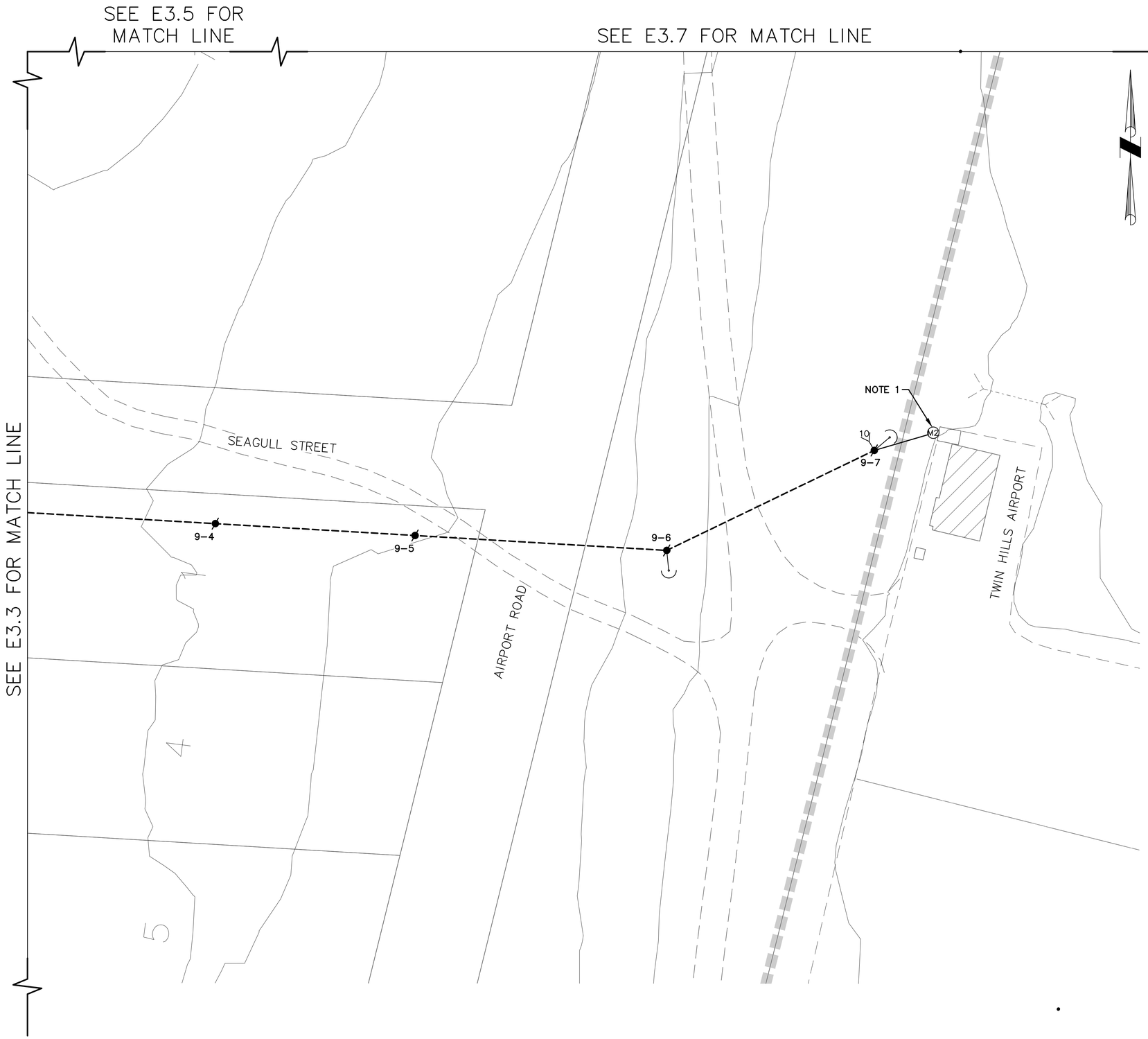

NOTES

1. INSTALL NEW RISER AND OVERHEAD SERVICE.
2. ALL WORK ON THIS SHEET SHALL BE ADDITIVE ALTERNATE A.

SCALE IN FEET

30 0 30 60

State of Alaska
Department of Commerce, Community and Economic Development
AIDEA/AEA
Rural Energy Group
813 West Northern Lights Blvd.
Anchorage, Alaska 99503

ALASKA ENERGY AUTHORITY

STATE OF ALASKA
49TH
CLOIS W. VERSTEEG
EE 7802
08/27/2018
REGISTERED PROFESSIONAL ENGINEER

Gray Stassel Engineering, Inc.
P.O. 111405, Anchorage, AK 99511 (907)349-0100

CRW ENGINEERING GROUP, LLC
3940 ARCTIC BLVD. SUITE 300
ANCHORAGE, ALASKA 99503
PHONE: (907) 562-3252
#AECL882-AK

TWIN HILLS, ALASKA
RURAL POWER
SYSTEM UPGRADE
TWIN HILLS DISTRIBUTION PLAN
(4 of 13)

NO.	REVISION	BY	DATE
0	ISSUED FOR CONSTRUCTION	TRK	8/2018

Plot Date 10/2/18
Designed CWV
Drawn TRK
Approved CWV

Sheet No. E3.4

File: J:\JobsData\30404.09 Twin Hills RPSU\00 CADD\01 Working Set\03 Electrical\30404.09-TWIN HILLS RPSU.dwg

NOTES

1. INSTALL NEW METER IN EXISTING METER BASE.
2. POSITION POLE AND GUY TO COORDINATE WITH THE EXISTING LIFT STATION AND SEWER LINE.
3. EXISTING RISER IS BENT AT THE ROOF LINE, REPLACE WITH 2" GRC AND 3#2 AWG TO THE METER BASE. THE EXISTING BUILDING IS TWO-STORY, EXTEND RISER ABOVE ROOF AS REQUIRED TO COORDINATE WITH NEW SERVICE. REPLACE ROOF BOOT AT THE RISER PENETRATION.
4. REMOVE THE EXISTING INSTRUMENT RATED METER BASE AND REPLACE WITH THE ONE INDICATED. CONNECT TO THE EXISTING CT'S AND VOLTAGE CONDUCTORS.
5. INSTALL SIDEWALK GUY. GUY AND ANCHOR SHALL BE INSTALLED IN ROAD EASEMENT.
6. INSTALL ANCHOR SUCH THAT IT STAYS ON PROPERTY POLE IS INSTALLED ON.
7. POWER LIGHT AT LOCATION 11 FROM SCHOOL TRANSFORMER.
8. PROVIDE SINGLE-PHASE SERVICE DROP INTO POWER PLANT FOR TEMPORARY VILLAGE POWER UNTIL TIE LINE IS CONSTRUCTED.
9. INSTALL SIDEWALK GUY. DO NOT INSTALL IN ROAD OR DRIVE.
10. ALL WORK ON THIS SHEET SHALL BE ADDITIVE ALTERNATE A.

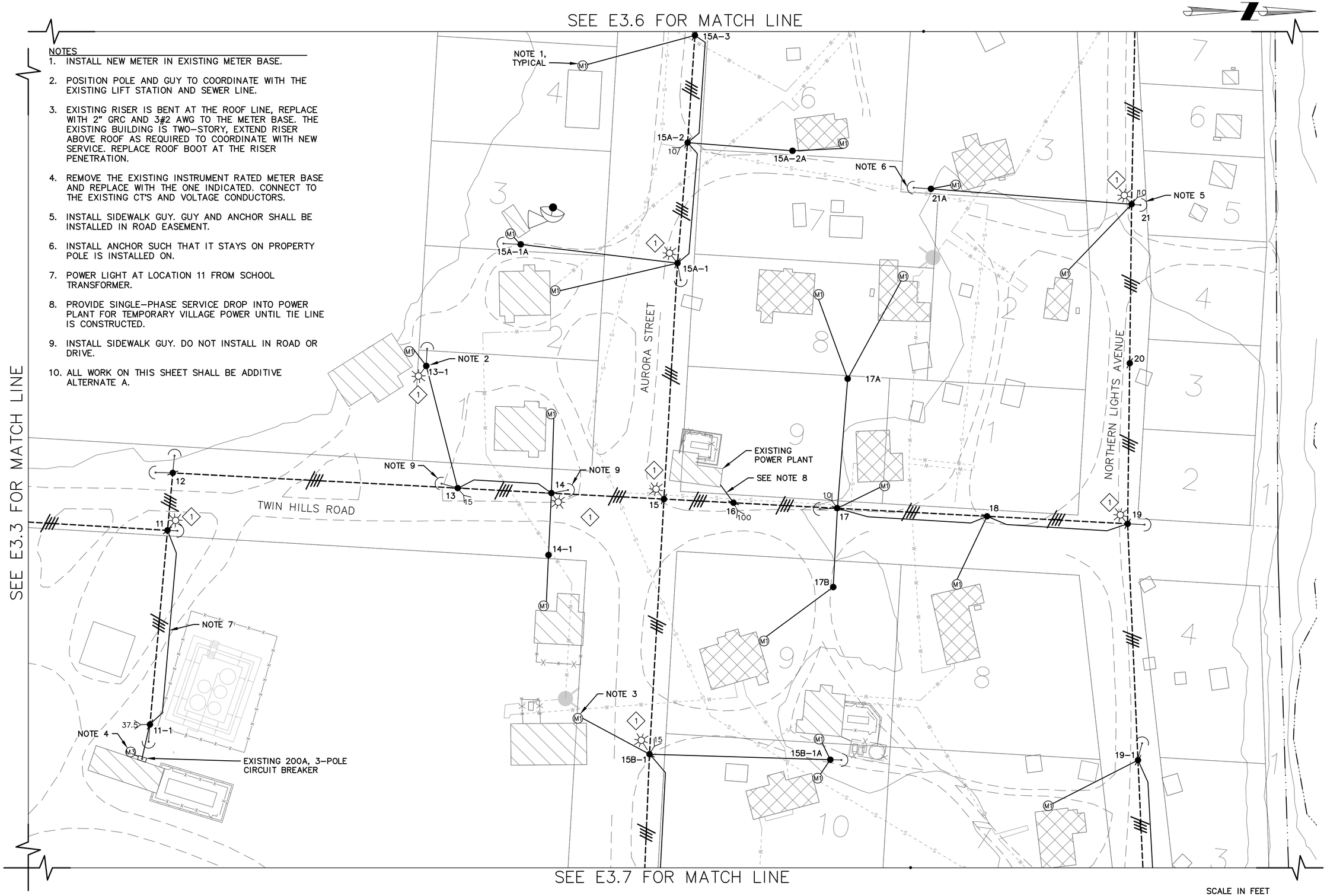

State of Alaska
Department of Commerce, Community and Economic Development
AIDEA/AEA
Rural Energy Group
813 West Northern Lights Blvd.
Anchorage, Alaska 99503

ALASKA ENERGY AUTHORITY

STATE OF ALASKA 49TH
CLOS W. VERSTEEG
EE 7802
08/27/2018
REGISTERED PROFESSIONAL ENGINEER

Gray Stassel Engineering, Inc.
P.O. 111405, Anchorage, AK 99511 (907)349-0100

CRW ENGINEERING GROUP, LLC
3940 ARCTIC BLVD. SUITE 300
ANCHORAGE, ALASKA 99503
PHONE: (907) 562-3252
#AECL882-AK

TWIN HILLS, ALASKA
RURAL POWER SYSTEM UPGRADE
TWIN HILLS DISTRIBUTION PLAN
(6 of 13)

NO.	REVISION	BY	DATE
0	ISSUED FOR CONSTRUCTION	TRK	8/2018

Plot Date 10/2/18
Designed CWV
Drawn TRK
Approved CWV

Sheet No. E3.5

File: J:\JobsData\30404.09 Twin Hills RPSU\00 CADD\01 Working Set\03 Electrical\30404.09-TWIN HILLS RPSU.dwg

NOTES

1. INSTALL SIDEWALK GUY. GUY AND ANCHOR SHALL BE INSTALLED IN ROAD EASEMENT.

2. ALL WORK ON THIS SHEET SHALL BE ADDITIVE ALTERNATE A.

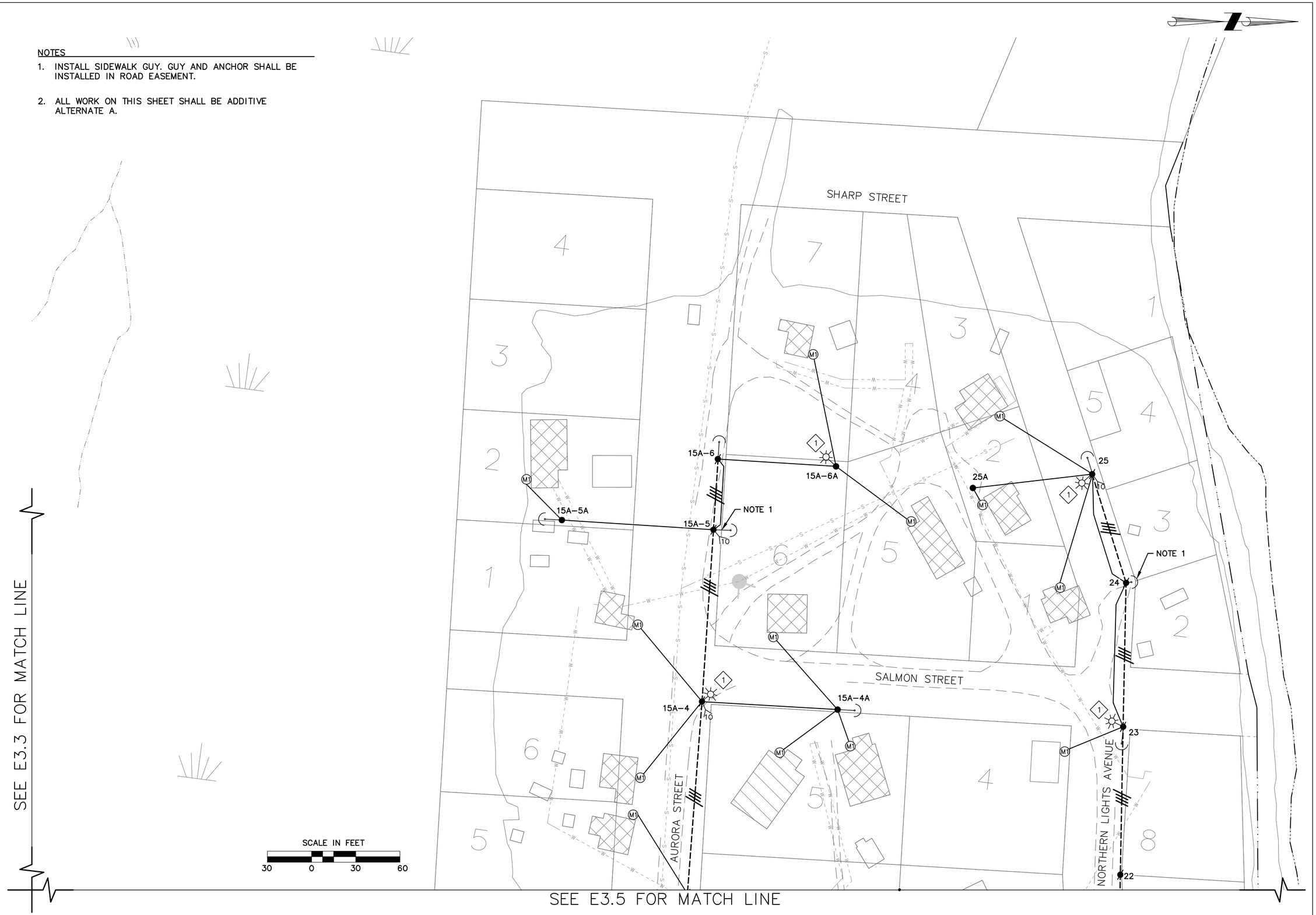

State of Alaska
Department of Commerce, Community and Economic Development
AIDEA/AEA
Rural Energy Group
813 West Northern Lights Blvd.
Anchorage, Alaska 99503

STATE OF ALASKA 49TH
CLOIS W. VERSTEEG
EE 7802
08/27/2018
REGISTERED PROFESSIONAL ENGINEER

Gray Stassel Engineering, Inc.
P.O. 111405, Anchorage, AK 99511 (907)349-0100

CRW ENGINEERING GROUP, LLC
3940 ARCTIC BLVD. SUITE 300
ANCHORAGE, ALASKA 99503
PHONE: (907) 562-3252
#AECL882-AK

TWIN HILLS, ALASKA
RURAL POWER SYSTEM UPGRADE
TWIN HILLS DISTRIBUTION PLAN
(6 of 13)

NO.	REVISION	BY	DATE
0	ISSUED FOR CONSTRUCTION	TRK	8/2018

Plot Date 10/2/18
Designed CWV
Drawn TRK
Approved CWV

Sheet No. E3.6

File: J:\JobsData\30404.09 Twin Hills RPSU\00 CADD\01 Working Set\03 Electrical\30404.09-TWIN HILLS RPSU.dwg

SEE E3.6 FOR MATCH LINE

NOTES

1. INSTALL GUY AND ANCHOR WITHIN ROAD EASEMENT.
2. OVERHEAD GUY. LENGTH AS REQUIRED TO SPAN ROAD. SET GUY POLE 10 FEET BACK FROM ROAD.
3. POSITION POLE SUCH THAT ANCHOR AND GUY ARE NOT IN THE DRIVEN PATH.
4. ALL WORK ON THIS SHEET SHALL BE ADDITIVE ALTERNATE A.

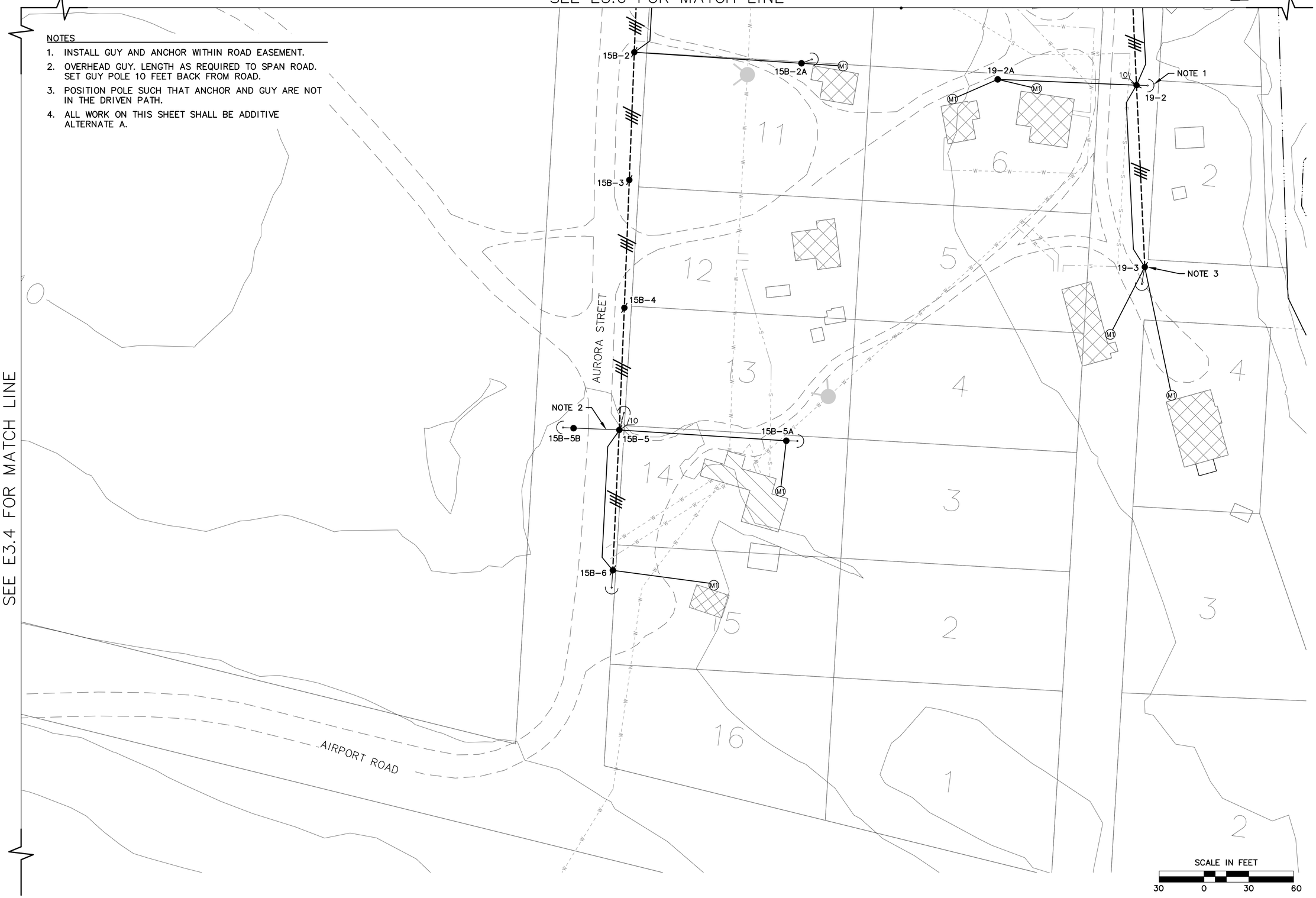

SEE E3.4 FOR MATCH LINE

File: J:\JobsData\30404.09 Twin Hills RPSU\00 CADD\01 Working Set\03 Electrical\30404.09-TWIN HILLS RPSU.dwg

State of Alaska
Department of Commerce, Community and Economic Development
AIDEA/AEA
Rural Energy Group
813 West Northern Lights Blvd.
Anchorage, Alaska 99503
ALASKA ENERGY AUTHORITY

STATE OF ALASKA 49TH
CLOIS W. VERSTEEG
EE 7802
08/27/2018
REGISTERED PROFESSIONAL ENGINEER

Gray Stassel Engineering, Inc.
P.O. 111405, Anchorage, AK 99511 (907)349-0100

CRW ENGINEERING GROUP, LLC
3940 ARCTIC BLVD. SUITE 300
ANCHORAGE, ALASKA 99503
PHONE: (907) 562-3252
#AECL882-AK

TWIN HILLS, ALASKA
RURAL POWER SYSTEM UPGRADE
TWIN HILLS DISTRIBUTION PLAN
(7 of 13)

NO.	REVISION	BY	DATE
0	ISSUED FOR CONSTRUCTION	TRK	8/2018

Plot Date 10/2/18
Designed CWV
Drawn TRK
Approved CWV

Sheet No. E3.7

File: J:\JobsData\30404.09 Twin Hills RPSU\00 CADD\01 Working Set\03 Electrical\30404.09-TWIN HILLS RPSU.dwg

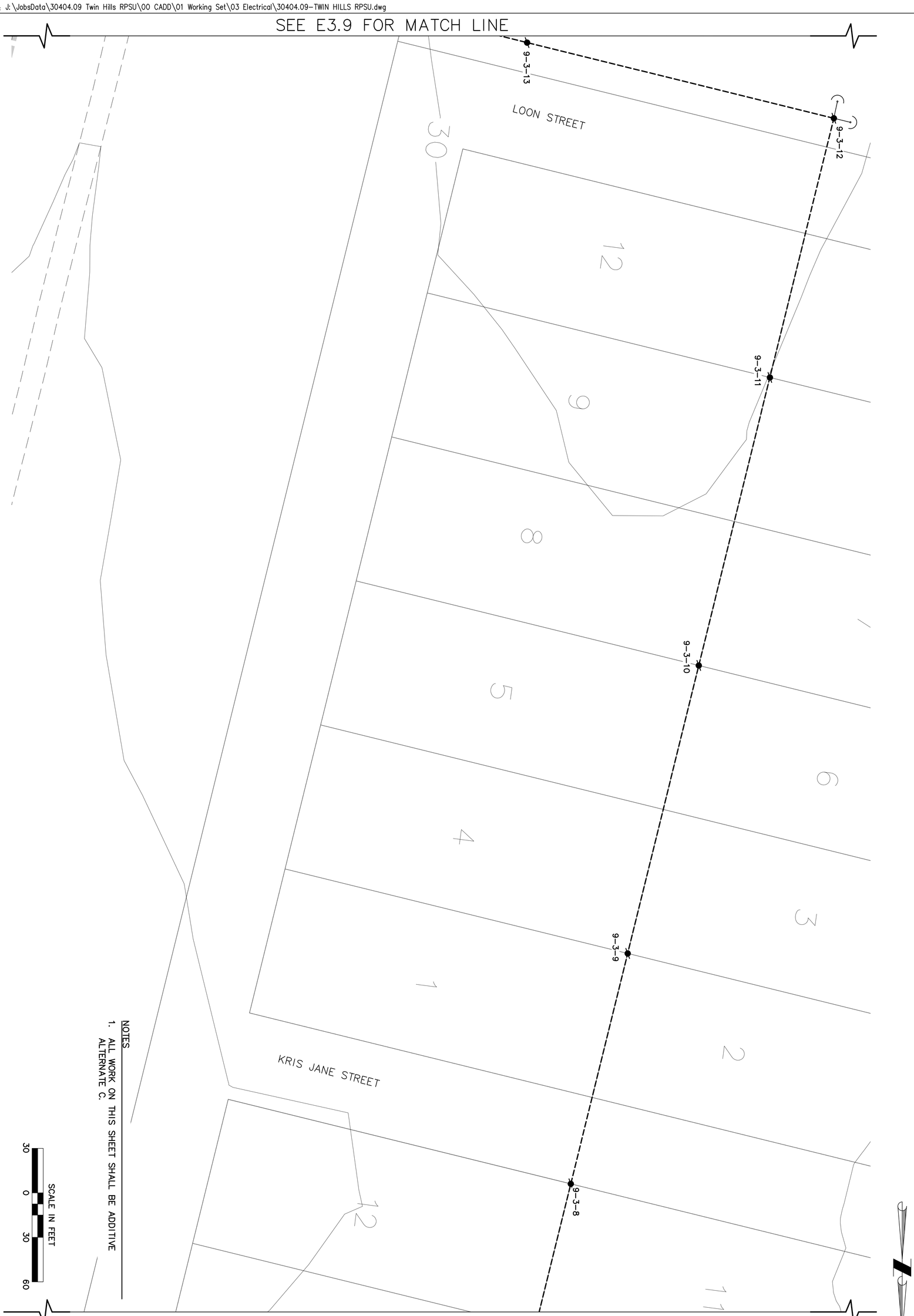

NOTES

1. ALL WORK ON THIS SHEET SHALL BE ADDITIVE ALTERNATE C.

NO.	REVISION	BY	DATE
0	ISSUED FOR CONSTRUCTION	TRK	8/2018

Sheet No. E3.8

Plot Date 10/2/18
Designed CWV
Drawn TRK
Approved CWV

TWIN HILLS, ALASKA

RURAL POWER SYSTEM UPGRADE

TWIN HILLS DISTRIBUTION PLAN (8 of 13)

CRW ENGINEERING GROUP, LLC
3940 ARCTIC BLVD. SUITE 300
ANCHORAGE, ALASKA 99503
PHONE: (907) 562-3252
#AECL882-AK

Gray Stassel Engineering, Inc.
P.O. 111405, Anchorage, AK 99511 (907)349-0100

STATE OF ALASKA
CLOIS W. VERSER
EE 7802
08/27/2018
REGISTERED PROFESSIONAL ENGINEER

State of Alaska
Department of Community and Economic Development
AIDEA/AEA
Rural Energy Group
813 West Northern Lights Blvd.
Anchorage, Alaska 99503
ALASKA ENERGY AUTHORITY

File: J:\JobsData\30404.09 Twin Hills RPSU\00 CADD\01 Working Set\03 Electrical\30404.09-TWIN HILLS RPSU.dwg

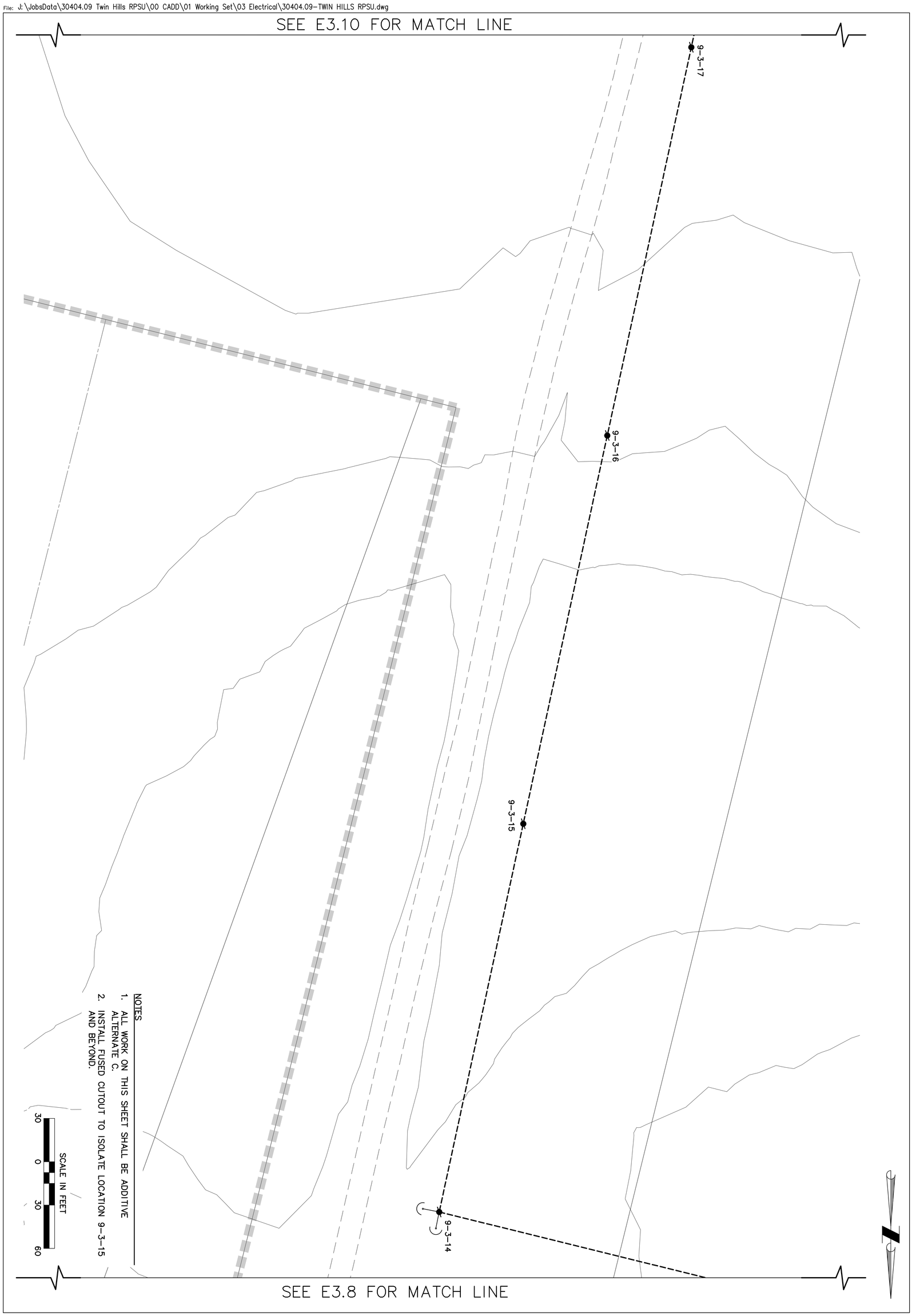

NOTES

1. ALL WORK ON THIS SHEET SHALL BE ADDITIVE ALTERNATE C.
2. INSTALL FUSED CUTOUT TO ISOLATE LOCATION 9-3-15 AND BEYOND.

Sheet No. E3.9	Plot Date 10/2/18	NO.	REVISION	BY	DATE
		0	ISSUED FOR CONSTRUCTION	TRK	8/2018
	Designed CWV				
	Drawn TRK				
	Approved CWV				

TWIN HILLS, ALASKA

RURAL POWER
SYSTEM UPGRADE

TWIN HILLS DISTRIBUTION PLAN
(9 of 13)

CRW ENGINEERING GROUP, LLC
3940 ARCTIC BLVD, SUITE 300
ANCHORAGE, ALASKA 99503
PHONE: (907) 562-3252
#AECL882-AK

Gray Stassel Engineering, Inc.
P.O. 111405, Anchorage, AK 99511 (907)349-0100

STATE OF ALASKA
49TH
CLOIS W. VERSTEEG
EE 7802
08/27/2018
REGISTERED PROFESSIONAL ENGINEER

State of Alaska
Department of Community and Economic Development
AIDEA/AEA
Rural Energy Group
813 West Northern Lights Blvd.
Anchorage, Alaska 99503
ALASKA ENERGY AUTHORITY

File: J:\JobsData\30404.09 Twin Hills RPSU\00 CADD\01 Working Set\03 Electrical\30404.09-TWIN HILLS RPSU.dwg

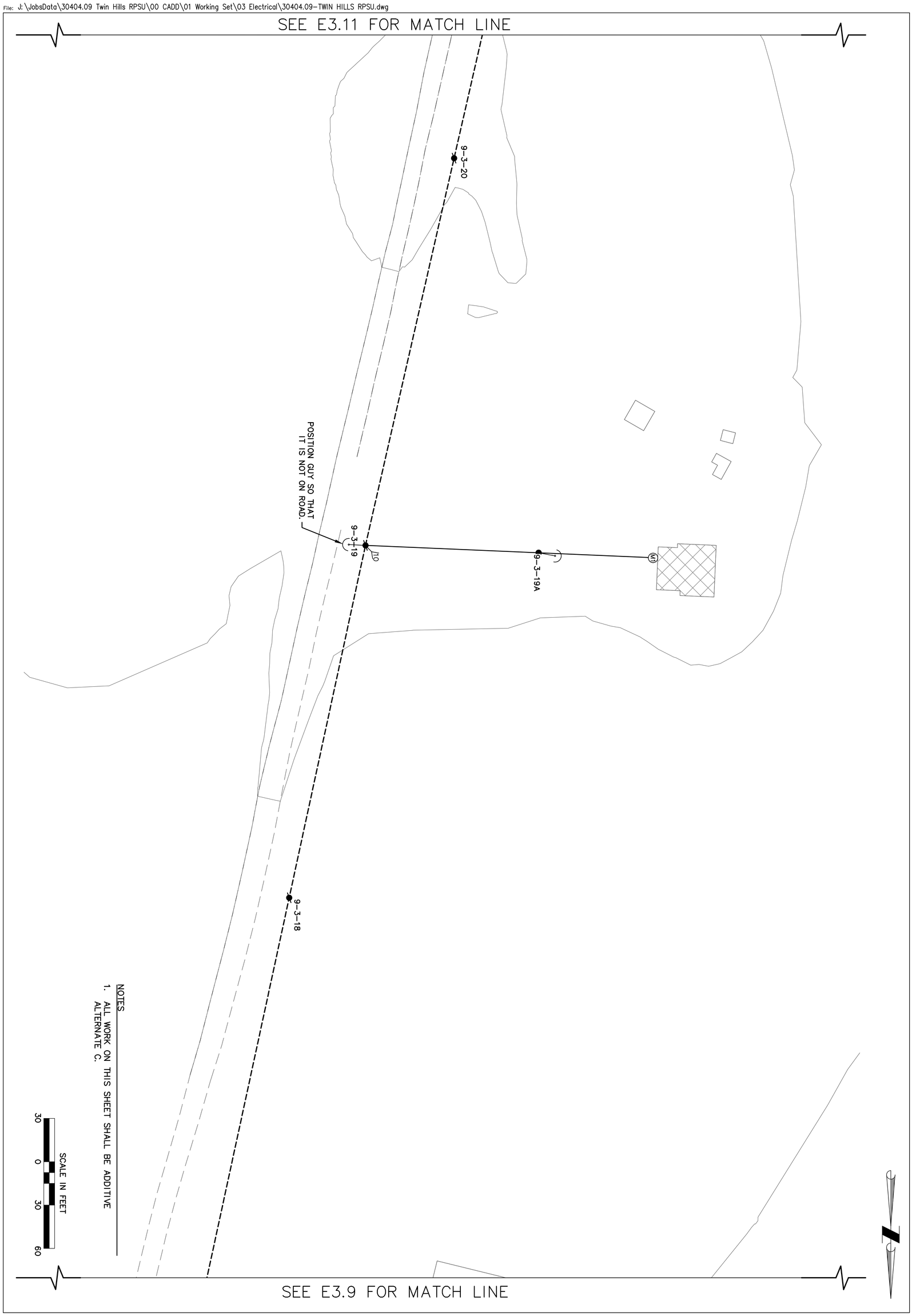

Sheet No.	Plot Date	Designed	Drawn	Approved
E3.10	10/2/18	CWV	TRK	CWV

NO.	REVISION	BY	DATE
0	ISSUED FOR CONSTRUCTION	TRK	8/2018

TWIN HILLS, ALASKA

RURAL POWER SYSTEM UPGRADE

TWIN HILLS DISTRIBUTION PLAN (10 of 13)

CRW ENGINEERING GROUP, LLC
3940 ARCTIC BLVD. SUITE 300
ANCHORAGE, ALASKA 99503
PHONE: (907) 562-3252
#AECL882-AK

Gray Stassel Engineering, Inc.
P.O. 111405, Anchorage, AK 99511 (907)349-0100

STATE OF ALASKA
CLOIS W. VERSTEEG
EE 7802
08/27/2018
REGISTERED PROFESSIONAL ENGINEER

State of Alaska
Department of Community and Economic Development
AIDEA/AEA
Rural Energy Group
813 West Northern Lights Blvd.
Anchorage, Alaska 99503
ALASKA ENERGY AUTHORITY

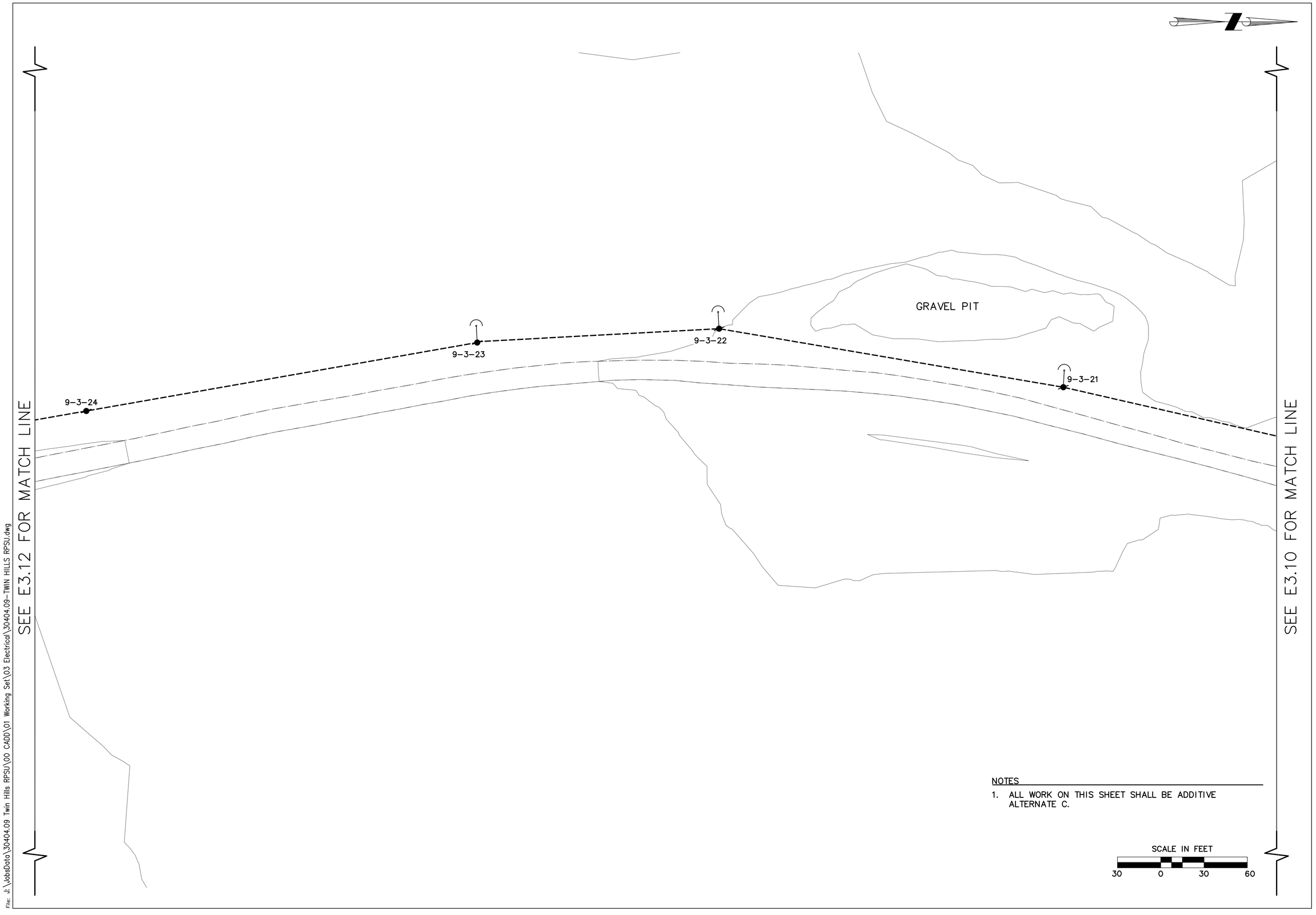

NOTES

1. ALL WORK ON THIS SHEET SHALL BE ADDITIVE ALTERNATE C.

File: J:\JobsData\30404.09 Twin Hills RPSU\00 CADD\01 Working Set\03 Electrical\30404.09-TWIN HILLS RPSU.dwg

State of Alaska
Department of Commerce, Community and Economic Development
AIDEA/AEA
Rural Energy Group
813 West Northern Lights Blvd.
Anchorage, Alaska 99503
ALASKA ENERGY AUTHORITY

STATE OF ALASKA
49TH
CLOIS W. VERSTEEG
EE 7802
08/27/2018
REGISTERED PROFESSIONAL ENGINEER

Gray Stassel Engineering, Inc.
P.O. 111405, Anchorage, AK 99511 (907)349-0100

CRW ENGINEERING GROUP, LLC
3940 ARCTIC BLVD. SUITE 300
ANCHORAGE, ALASKA 99503
PHONE: (907) 562-3252
#AECL882-AK

TWIN HILLS, ALASKA
RURAL POWER SYSTEM UPGRADE
TWIN HILLS DISTRIBUTION PLAN
(11 of 13)

NO.	REVISION	BY	DATE
0	ISSUED FOR CONSTRUCTION	TRK	8/2018

Plot Date 10/2/18
Designed CWV
Drawn TRK
Approved CWV

Sheet No. E3.11

File: J:\JobsData\30404.09 Twin Hills RPSU\00 CADD\01 Working Set\03 Electrical\30404.09-TWIN HILLS RPSU.dwg

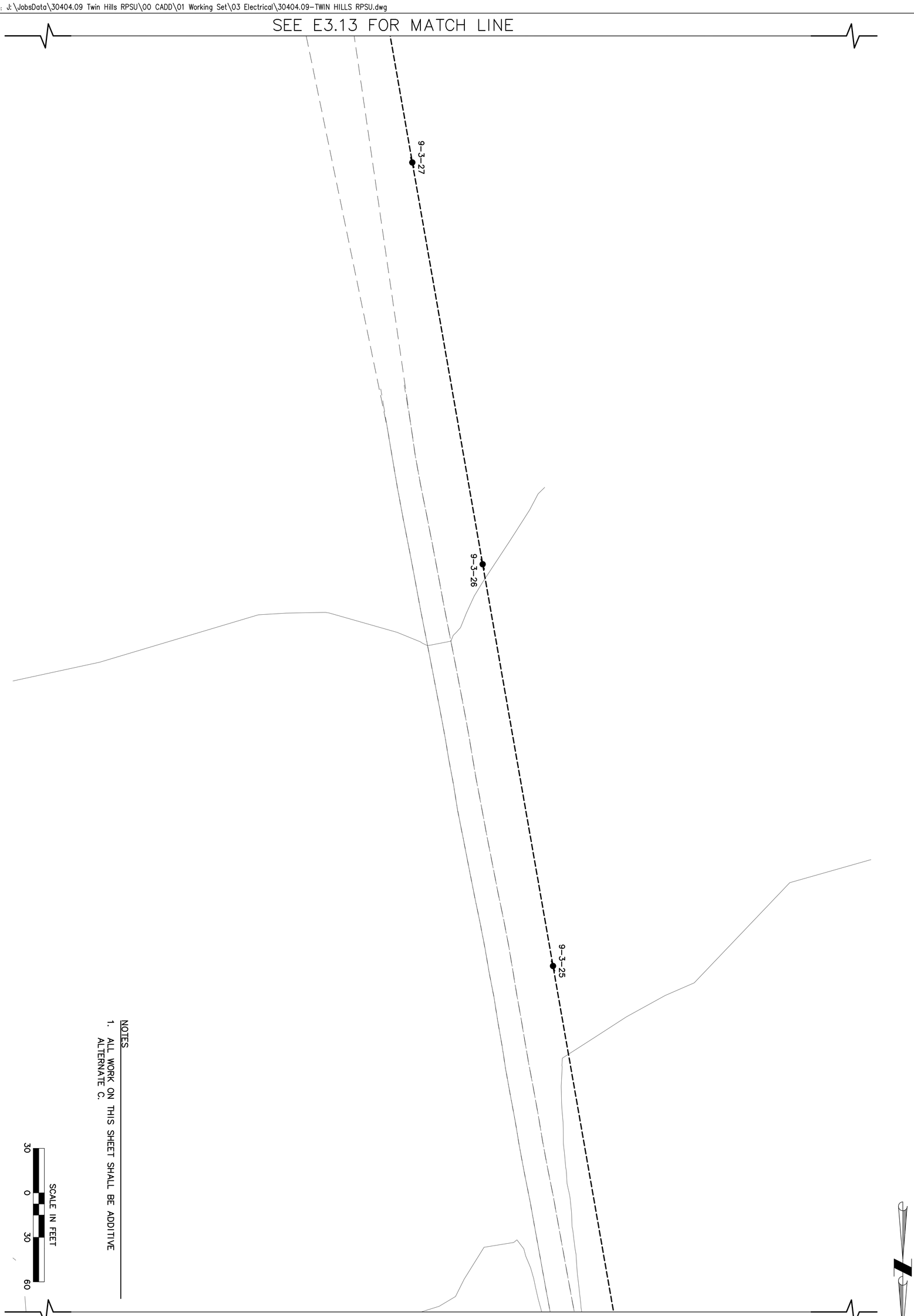

NOTES

1. ALL WORK ON THIS SHEET SHALL BE ADDITIVE ALTERNATE C.

NO.	REVISION	BY	DATE
0	ISSUED FOR CONSTRUCTION	TRK	8/2018

Sheet No. E3.12

Plot Date 10/2/18
Designed CWV
Drawn TRK
Approved CWV

TWIN HILLS, ALASKA

RURAL POWER SYSTEM UPGRADE

TWIN HILLS DISTRIBUTION PLAN (12 of 13)

CRW ENGINEERING GROUP, LLC
3940 ARCTIC BLVD, SUITE 300
ANCHORAGE, ALASKA 99503
PHONE: (907) 562-3252
#AECL882-AK

Gray Stassel Engineering, Inc.
P.O. 111405, Anchorage, AK 99511 (907)349-0100

STATE OF ALASKA
CLOIS W. VERSTEEG
EE 7802
08/27/2018
REGISTERED PROFESSIONAL ENGINEER

State of Alaska
Department of Community and Economic Development
AIDEA/AEA
Rural Energy Group
813 West Northern Lights Blvd.
Anchorage, Alaska 99503
ALASKA ENERGY AUTHORITY

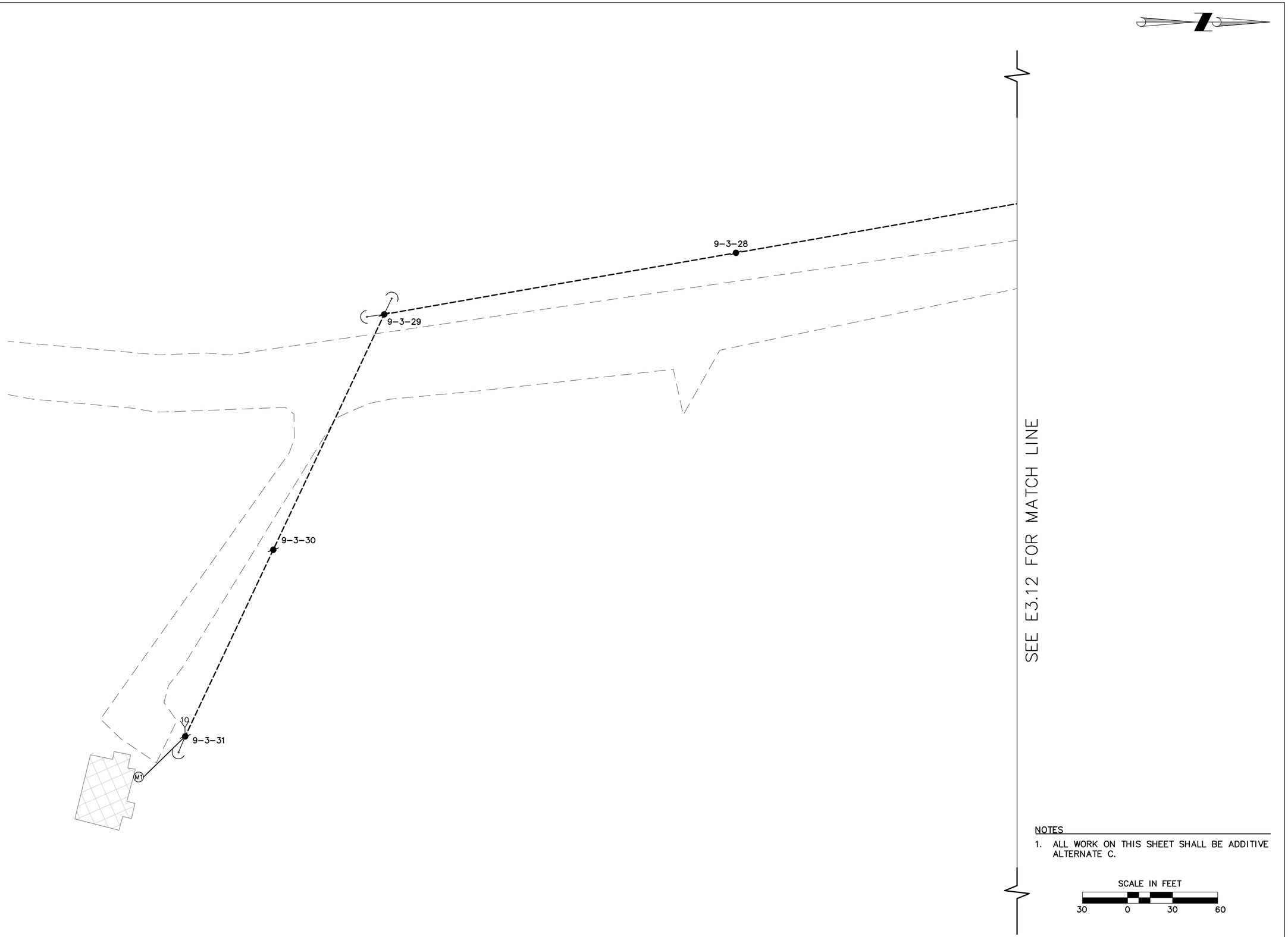

NOTES

1. ALL WORK ON THIS SHEET SHALL BE ADDITIVE ALTERNATE C.

SCALE IN FEET

30 0 30 60

State of Alaska
Department of Commerce, Community and Economic Development
AIDEA/AEA
Rural Energy Group
813 West Northern Lights Blvd.
Anchorage, Alaska 99503

ALASKA ENERGY AUTHORITY

STATE OF ALASKA
49TH
CLOIS W. VERSTEEG
EE 7802
08/27/2018
REGISTERED PROFESSIONAL ENGINEER

Gray Stassel Engineering, Inc.
P.O. 111405, Anchorage, AK 99511 (907)349-0100

CRW ENGINEERING GROUP, LLC
3940 ARCTIC BLVD. SUITE 300
ANCHORAGE, ALASKA 99503
PHONE: (907) 562-3252
#AECL882-AK

TWIN HILLS, ALASKA
RURAL POWER SYSTEM UPGRADE
TWIN HILLS DISTRIBUTION PLAN
(13 of 13)

NO.	REVISION	BY	DATE
0	ISSUED FOR CONSTRUCTION	TRK	8/2018

Plot Date 10/2/18
Designed CWV
Drawn TRK
Approved CWV

Sheet No. E3.13

File: J:\JobsData\30404.09 Twin Hills RPSU\00 CADD\01 Working Set\03 Electrical\30404.09-TWIN HILLS RPSU.dwg

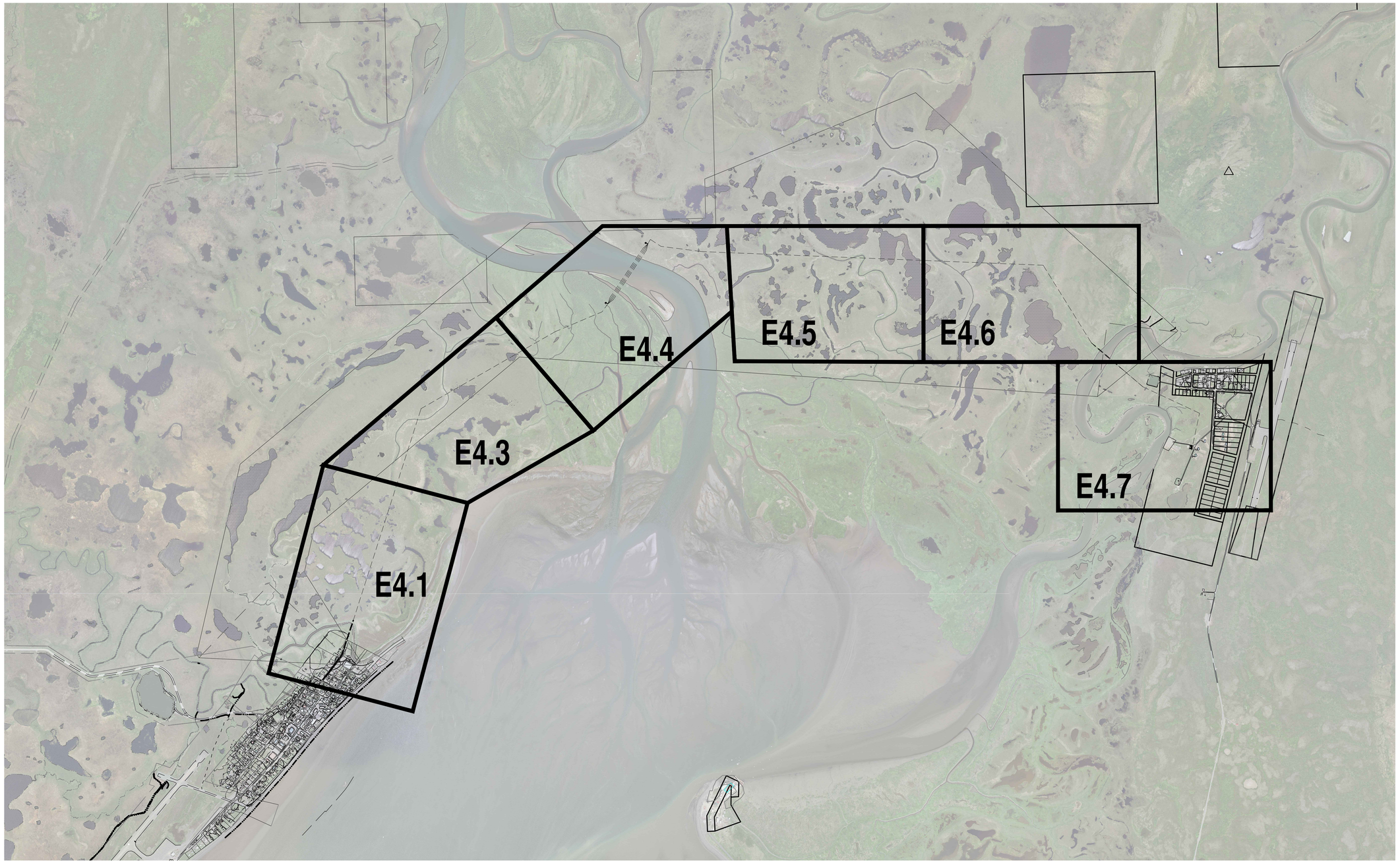

GRAPHIC SCALE

1000 0 1000 2000

SCALE IN FEET

State of Alaska
Department of Commerce
and Economic Development
AIDEA/AEA
Rural Energy Group
813 West Northern Lights Blvd.
Anchorage, Alaska 99503
ALASKA ENERGY AUTHORITY

STATE OF ALASKA 49TH CLOIS W. VERSTEEG EE 7802 08/27/2018 REGISTERED PROFESSIONAL ENGINEER

Gray Stassel Engineering, Inc.
P.O. 111405, Anchorage, AK 99511 (907)349-0100

CRW ENGINEERING GROUP, LLC
3940 ARCTIC BLVD. SUITE 300
ANCHORAGE, ALASKA 99503
PHONE: (907) 562-3252
#AECL882-AK

TOGIAK/TWIN HILLS, ALASKA
TOGIAK – TWIN HILLS
INTERTIE
INTERTIE OVERVIEW

NO.	REVISION	BY	DATE
0	ISSUED FOR CONSTRUCTION	TRK	8/2018

Plot Date 10/2/18
Designed CWV
Drawn TRK
Approved CWV

Sheet No. E4.0

File: J:\JobsData\30404.09 Twin Hills RPSU\00 CADD\01 Working Set\03 Electrical\Twin Hills-Togiak INTERTIE.DWG

NEW WORK PLAN

SCALE: 1"=40'

GENERAL NOTES

1. ALL WORK SHALL BE COORDINATED WITH AVEC. ALL OUTAGES SHALL BE KEPT TO A MINIMUM. AVEC SHALL HAVE FINAL AUTHORITY ON WHEN AN OUTAGE CAN OCCUR.
2. CONTRACTOR SHALL NOTIFY AVEC ONE WEEK IN ADVANCE OF ANY REQUIRED OUTAGE ON THE TOGIAK DISTRIBUTION LINE. NO WORK IS TO BE PREFORMED ON THE TOGIAK DISTRIBUTION SYSTEM WITHOUT AUTHORIZATION FROM AVEC.
3. ALL WORK ON THIS SHEET SHALL BE BID ITEM 1.

GRAPHIC SCALE

40 0 40 80

SCALE IN FEET

State of Alaska
Department of Commerce, Community and Economic Development
AIDEA/AEA
Rural Energy Group
813 West Northern Lights Blvd.
Anchorage, Alaska 99503
ALASKA ENERGY AUTHORITY

STATE OF ALASKA
49TH
CLOIS W. VERSTEEG
EE 7802
08/27/2018
REGISTERED PROFESSIONAL ENGINEER

Gray Stassel Engineering, Inc.
P.O. 111405, Anchorage, AK 99511 (907)349-0100

CRW ENGINEERING GROUP, LLC
3940 ARCTIC BLVD. SUITE 300
ANCHORAGE, ALASKA 99503
PHONE: (907) 562-3252
#AECL882-AK

TOGIAK/TWIN HILLS, ALASKA
TOGIAK – TWIN HILLS
INTERTIE
INTERTIE PLAN
(1 of 7)

NO.	REVISION	BY	DATE
0	ISSUED FOR CONSTRUCTION	TRK	8/2018

Plot Date 10/2/18
Designed CWV
Drawn TRK
Approved CWV

Sheet No. E4.1

File: J:\JobsData\30404.09 Twin Hills RPSU\00 CADD\01 Working Set\03 Electrical\Twin Hills-Togiak INTERTIE.DWG

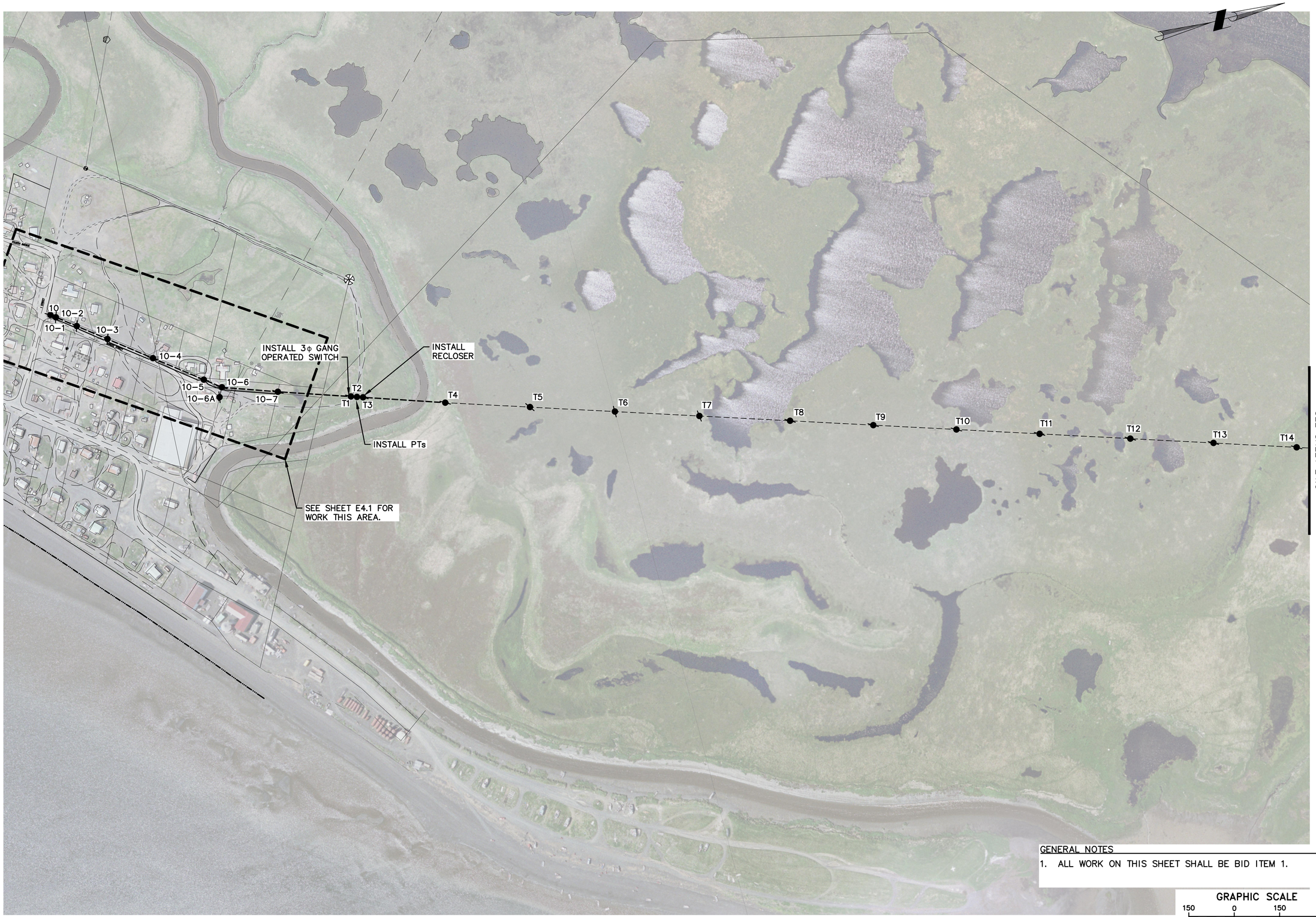

GENERAL NOTES

1. ALL WORK ON THIS SHEET SHALL BE BID ITEM 1.

GRAPHIC SCALE

150 0 150 300

SCALE IN FEET

State of Alaska
Department of Commerce, Community and Economic Development
AIDEA/AEA
Rural Energy Group
813 West Northern Lights Blvd.
Anchorage, Alaska 99503

ALASKA ENERGY AUTHORITY

STATE OF ALASKA 49TH
CLOIS W. VERSTEEG
EE 7802
08/27/2018
REGISTERED PROFESSIONAL ENGINEER

Gray Stassel Engineering, Inc.
P.O. 111405, Anchorage, AK 99511 (907)349-0100

CRW ENGINEERING GROUP, LLC
3940 ARCTIC BLVD. SUITE 300
ANCHORAGE, ALASKA 99503
PHONE: (907) 562-3252
#AECL882-AK

TOGIAK/TWIN HILLS, ALASKA

TOGIAK – TWIN HILLS INTERTIE

INTERTIE PLAN (2 of 7)

NO.	REVISION	BY	DATE
0	ISSUED FOR CONSTRUCTION	TRK	8/2018

Plot Date 10/2/18
Designed CWV
Drawn TRK
Approved CWV

Sheet No. E4.2

File: J:\JobsData\30404.09 Twin Hills RPSU\00 CADD\01 Working Set\03 Electrical\Twin Hills-Togiak INTERTIE.DWG

File: J:\JobsData\30404.09 Twin Hills RPSU\00 CADD\01 Working Set\03 Electrical\Twin Hills-Togiak INTERTIE.DWG

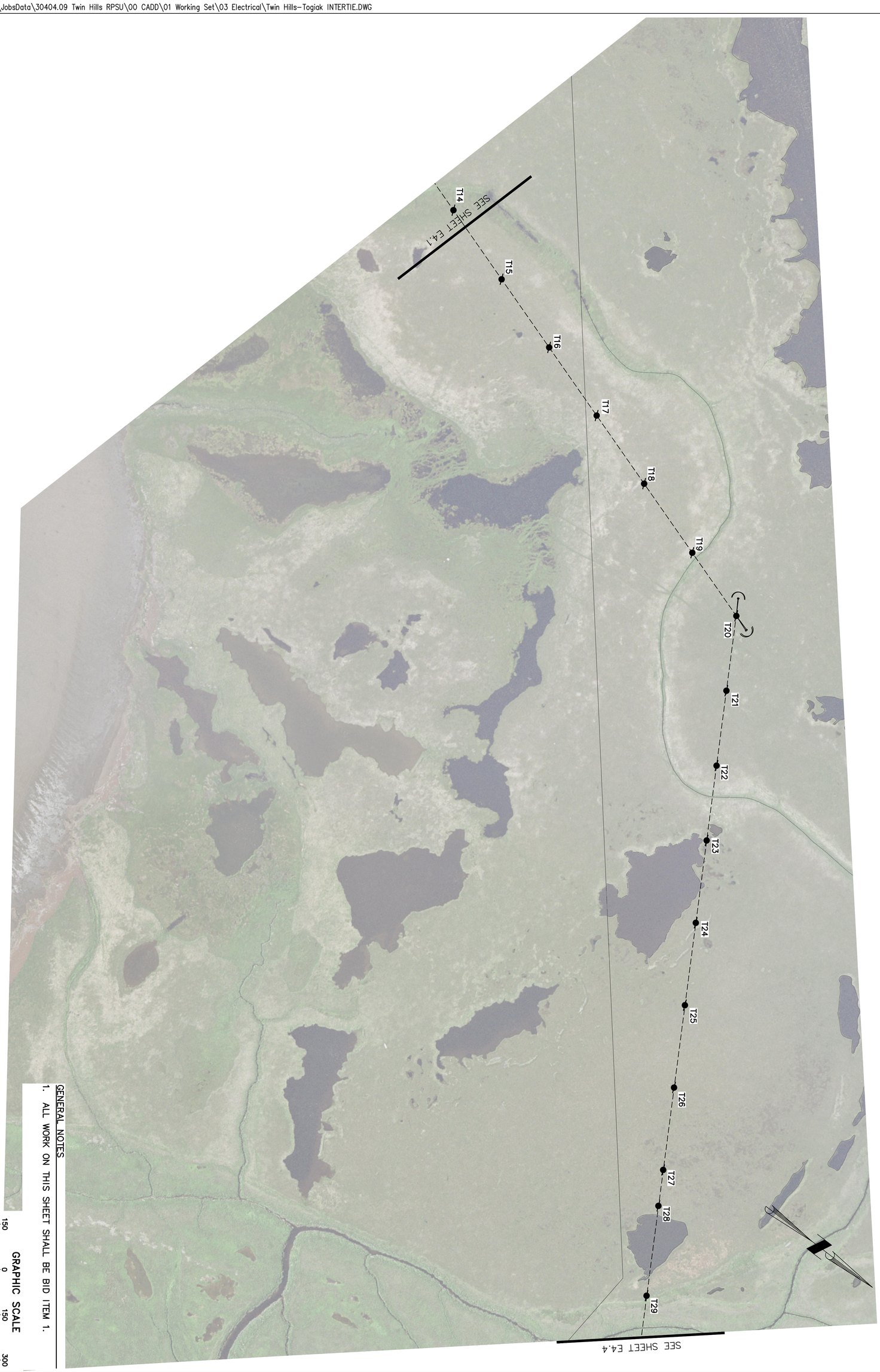

GENERAL NOTES

1. ALL WORK ON THIS SHEET SHALL BE BID ITEM 1.

GRAPHIC SCALE

150 0 150 300

SCALE IN FEET

NO.	REVISION	BY	DATE
0	ISSUED FOR CONSTRUCTION	TRK	8/2018

Sheet No. E4.3

Plot Date 10/2/18

Designed CWV

Drawn TRK

Approved CWV

TOGIAK/TWIN HILLS, ALASKA

TOGIAK – TWIN HILLS INTERTIE

INTERTIE PLAN (3 of 7)

CRW ENGINEERING GROUP, LLC
3940 ARCTIC BLVD. SUITE 300
ANCHORAGE, ALASKA 99503
PHONE: (907) 562-3252
#AECL882-AK

Gray Stassel Engineering, Inc.
P.O. 111405, Anchorage, AK 99511 (907)349-0100

STATE OF ALASKA
CLOIS W. VERSTEEG
EE 7802
08/27/2018
REGISTERED PROFESSIONAL ENGINEER

State of Alaska
Department of Community and Economic Development
AIDEA/AEA
Rural Energy Group
813 West Northern Lights Blvd.
Anchorage, Alaska 99503
ALASKA ENERGY AUTHORITY

File: J:\JobsData\30404.09 Twin Hills RPSU\00 CADD\01 Working Set\03 Electrical\Twin Hills-Togiak INTERTIE.DWG

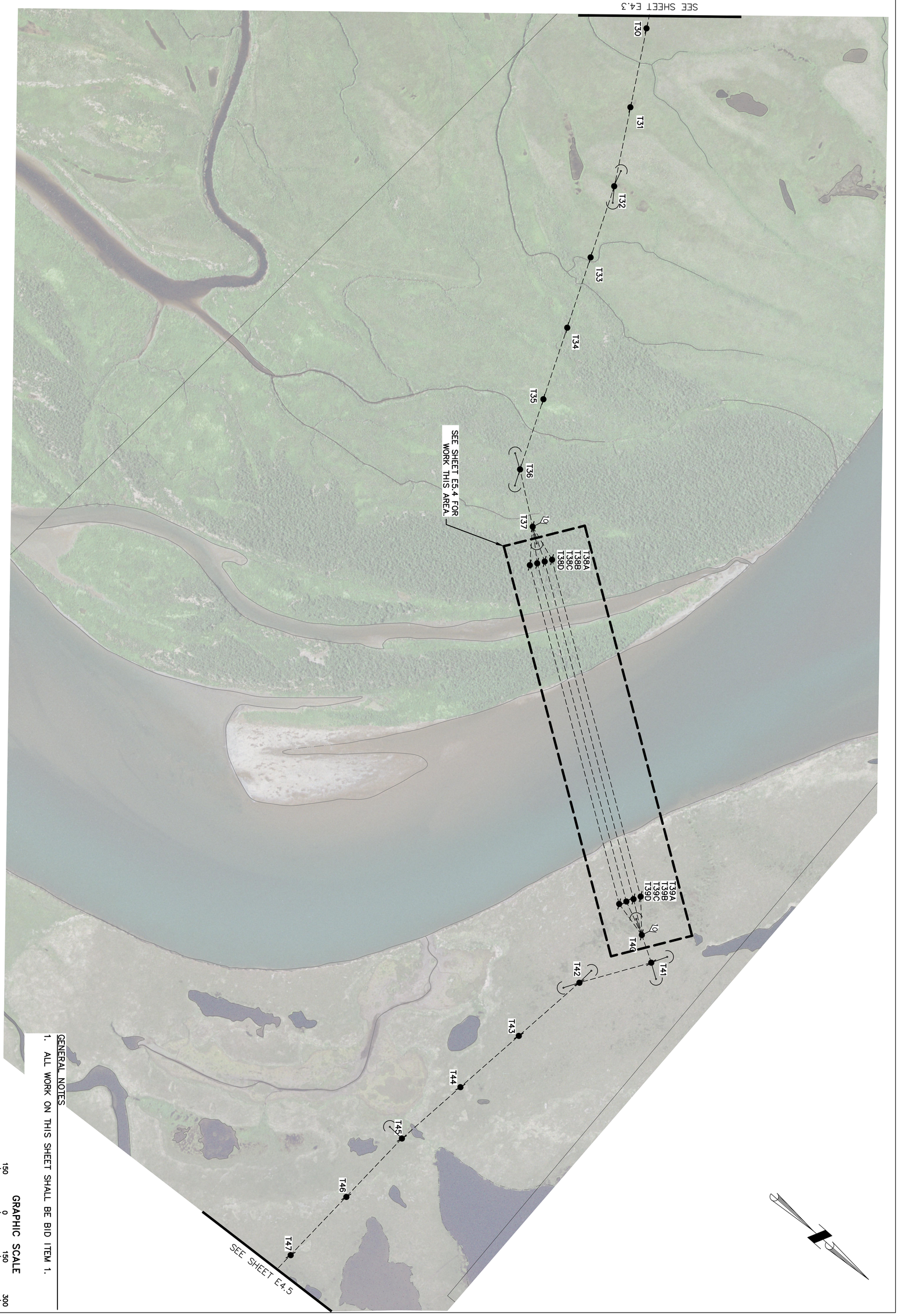

GENERAL NOTES

1. ALL WORK ON THIS SHEET SHALL BE BID ITEM 1.

GRAPHIC SCALE

150 0 150 300

SCALE IN FEET

Sheet No.	Plot Date	Designed	Drawn	Approved
E4.4	10/2/18	CWV	TRK	CWV

NO.	REVISION	BY	DATE
0	ISSUED FOR CONSTRUCTION	TRK	8/2018

TOGIAK/TWIN HILLS, ALASKA

TOGIAK – TWIN HILLS INTERTIE

INTERTIE PLAN (4 of 7)

CRW ENGINEERING GROUP, LLC
3940 ARCTIC BLVD. SUITE 300
ANCHORAGE, ALASKA 99503
PHONE: (907) 562-3252
#AECL882-AK

Gray Stassel Engineering, Inc.
P.O. 111405, Anchorage, AK 99511 (907)349-0100

STATE OF ALASKA
CLOIS W. VERSTEEG
EE 7802
08/27/2018
REGISTERED PROFESSIONAL ENGINEER

State of Alaska
Department of Community and Economic Development
AIDEA/AEA
Rural Energy Group
813 West Northern Lights Blvd.
Anchorage, Alaska 99503
ALASKA ENERGY AUTHORITY

File: J:\JobsData\30404.09 Twin Hills RPSU\00 CADD\01 Working Set\03 Electrical\Twin Hills-Togiak INTERTIE.DWG

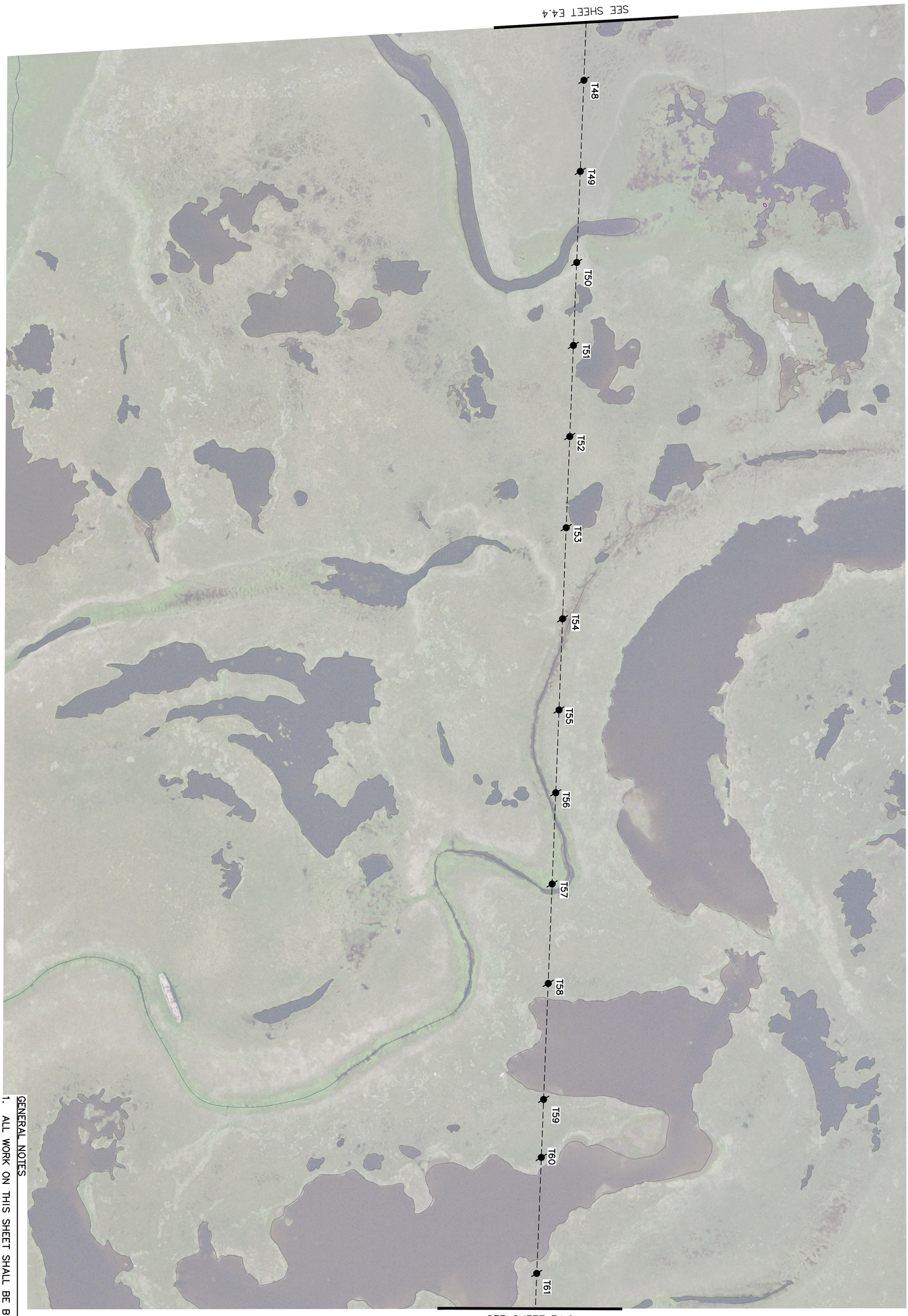

GENERAL NOTES

1. ALL WORK ON THIS SHEET SHALL BE BID ITEM 1.

GRAPHIC SCALE

150 0 150 300

SCALE IN FEET

NO.	REVISION	BY	DATE
0	ISSUED FOR CONSTRUCTION	TRK	8/2018

Sheet No. E4.5

Plot Date 10/2/18

Designed CWV

Drawn TRK

Approved CWV

TOGIAK/TWIN HILLS, ALASKA

TOGIAK – TWIN HILLS INTERTIE

INTERTIE PLAN (5 of 7)

CRW ENGINEERING GROUP, LLC
3940 ARCTIC BLVD, SUITE 300
ANCHORAGE, ALASKA 99503
PHONE: (907) 562-3252
#AECL882-AK

Gray Stassel Engineering, Inc.
P.O. 111405, Anchorage, AK 99511 (907)349-0100

STATE OF ALASKA
CLOIS W. VERSTEEG
EE 7802
08/27/2018
REGISTERED PROFESSIONAL ENGINEER

State of Alaska
Department of Community and Economic Development
AIDEA/AEA
Rural Energy Group
813 West Northern Lights Blvd.
Anchorage, Alaska 99503
ALASKA ENERGY AUTHORITY

GENERAL NOTES

1. ALL WORK ON THIS SHEET SHALL BE BID ITEM 1.

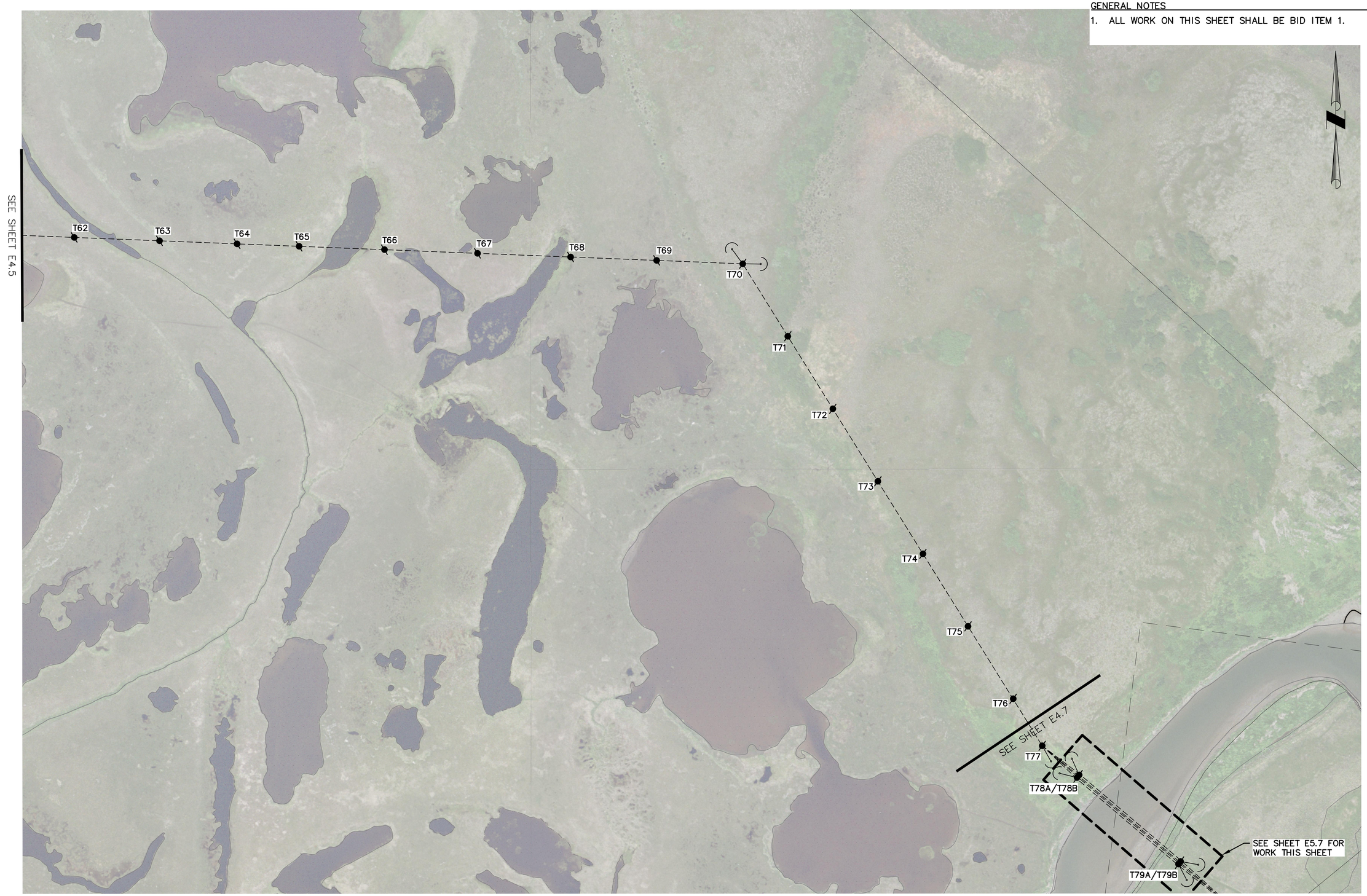

GRAPHIC SCALE

150 0 150 300

SCALE IN FEET

State of Alaska
Department of Commerce, Community and Economic Development
AIDEA/AEA
Rural Energy Group
813 West Northern Lights Blvd.
Anchorage, Alaska 99503
ALASKA ENERGY AUTHORITY

STATE OF ALASKA
49TH
CLOIS W. VERSTEEG
EE 7802
08/27/2018
REGISTERED PROFESSIONAL ENGINEER

Gray Stassel Engineering, Inc.
P.O. 111405, Anchorage, AK 99511 (907)349-0100

CRW ENGINEERING GROUP, LLC
3940 ARCTIC BLVD. SUITE 300
ANCHORAGE, ALASKA 99503
PHONE: (907) 562-3252
#AECL882-AK

TOGIAK/TWIN HILLS, ALASKA

TOGIAK – TWIN HILLS INTERTIE

INTERTIE PLAN
(6 of 7)

NO.	REVISION	BY	DATE
0	ISSUED FOR CONSTRUCTION	TRK	8/2018

Plot Date 10/2/18
Designed CWV
Drawn TRK
Approved CWV

Sheet No. E4.6

File: J:\Jobs\Data\30404.09 Twin Hills RPSU\00 CADD\01 Working Set\03 Electrical\Twin Hills-Togiak INTERTIE.DWG

GENERAL NOTES

1. ALL WORK ON THIS SHEET SHALL BE BID ITEM 1 UNLESS OTHERWISE NOTED.

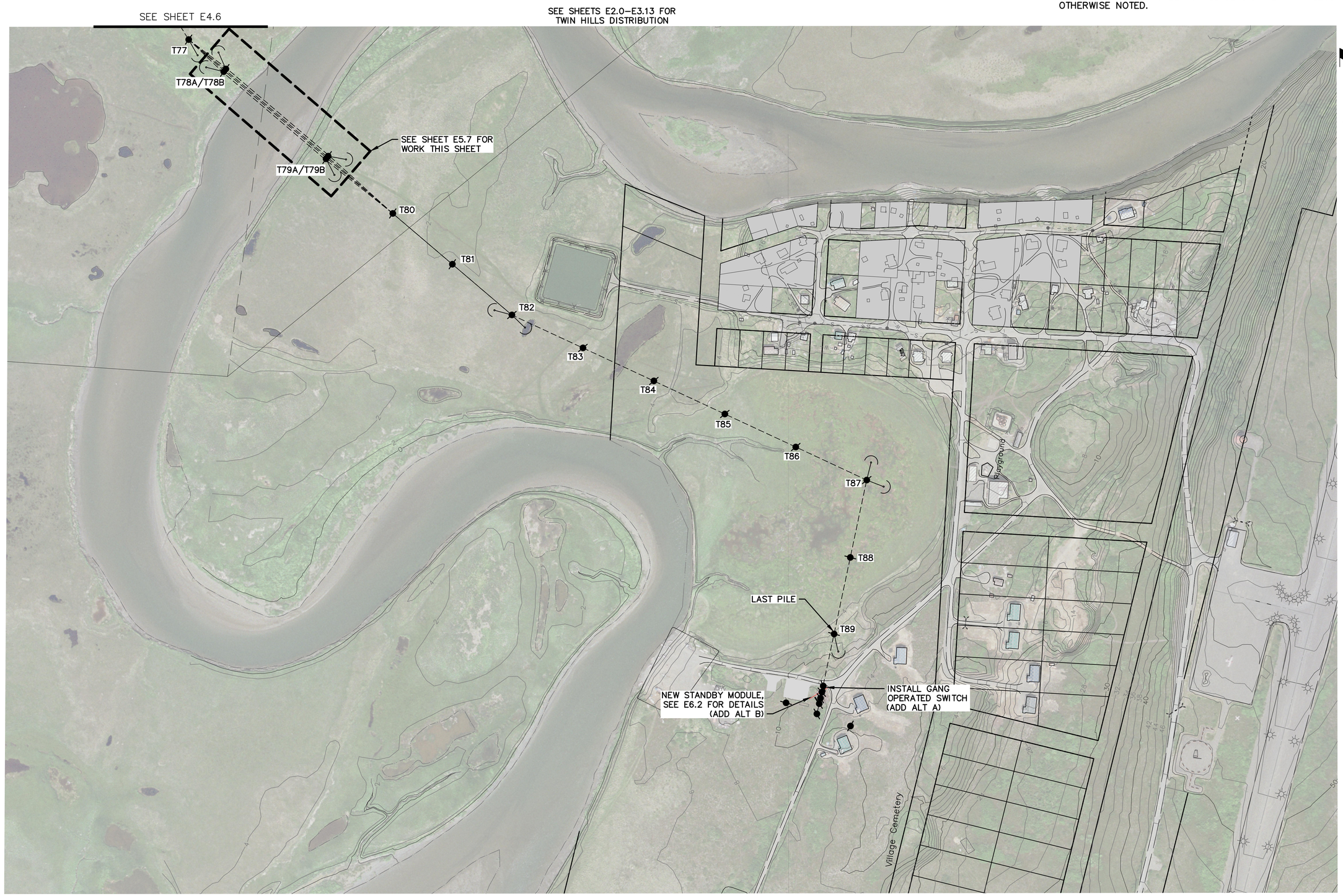

GRAPHIC SCALE

150 0 150 300

SCALE IN FEET

State of Alaska
Department of Commerce, Community and Economic Development
AIDEA/AEA
Rural Energy Group
813 West Northern Lights Blvd.
Anchorage, Alaska 99503

ALASKA ENERGY AUTHORITY

STATE OF ALASKA
49TH
CLOIS W. VERSTEEG
EE 7802
08/27/2018
REGISTERED PROFESSIONAL ENGINEER

Gray Stassel Engineering, Inc.
P.O. 111405, Anchorage, AK 99511 (907)349-0100

CRW ENGINEERING GROUP, LLC
3940 ARCTIC BLVD. SUITE 300
ANCHORAGE, ALASKA 99503
PHONE: (907) 562-3252
#AECL882-AK

TOGIAK/TWIN HILLS, ALASKA
TOGIAK – TWIN HILLS INTERTIE
INTERTIE PLAN (7 of 7)

NO.	REVISION	BY	DATE
0	ISSUED FOR CONSTRUCTION	TRK	8/2018

Plot Date 10/2/18
Designed CWV
Drawn TRK
Approved CWV

Sheet No. E4.7

File: J:\JobsData\30404.09 Twin Hills RPSU\00 CADD\01 Working Set\03 Electrical\Twin Hills-Togiak INTERTIE.DWG

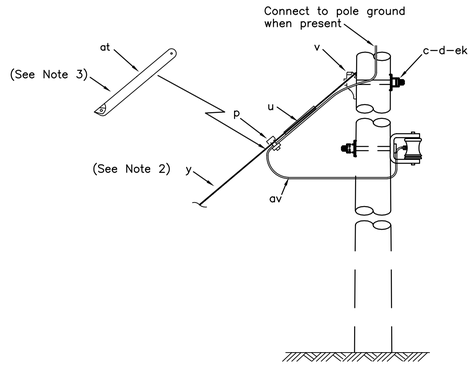

NOTES:
1. PROVIDE PRE–FORMED GUY DEADEND (u.) OTHER DEADEND MATERIAL SHALL NOT BE SUBSTITUTED.
2. GUY WIRE SHALL BE 3/8" EHS UNLESS OTHERWISE NOTED. SEE SPECIFICATION. 1
3. INSTALL RED STRIPED REFLECTIVE TAPE ON BOTH SIDES OF GUY GUARD. INSTALL TAPE IN WARM ENVIRONMENT, ABOVE MANUFACTURE RECOMMENDED TEMPERATURE.

ITEM	QTY	MATERIAL
c	1	Bolt, machine, 3/4" x req'd length
d	1	Washer, square, 4", curved
p		Connectors, guy bond and as req'd
j	1	Screw, lag, 1/2" x 4"
u	2	Deadend for guy strand, heavy duty
v	1	Guy attachment, guy hook type
y		Guy wire, as req'd
at	1	Guy marker, Yellow
av		Jumpers, as req'd
ck	1	Clamp, anchor bonding
ek	1	Locknuts

DESIGN PARAMETERS:

PERMITTED LOAD IS LEAST OF: 8,500 LBS (IN ANY DIRECTION) or 90% of RATED BREAKING STRENGTH OF GUY WIRE

SINGLE DOWN GUY (THROUGH BOLT TYPE)

DEC 2017 | E1.1La

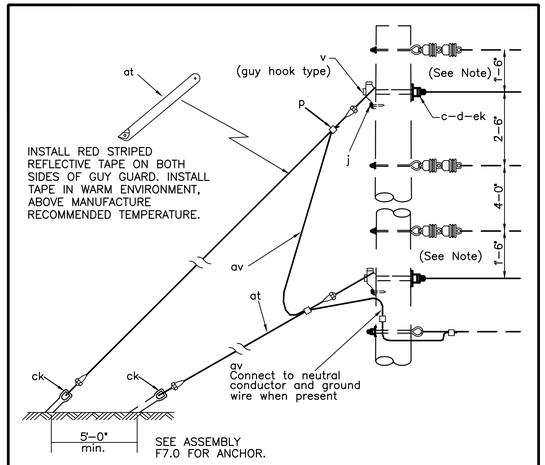

NOTES:
Position guys as shown on applicable pole top assembly unit if different than shown here. If distance between primary assembly and down guy is less than 12', install (minimum 12") guy strain insulator,(item "w"), or insulated extension link, (item "eu"), (mininum 12"), in primary assembly.

The following single down guy assemblies may be used, (multiply material quantities by 2):

E1.1La: Through Bolt Type, Heavy Duty

DESIGN PARAMETERS:

(See Single Down Guy drawings)

DOUBLE DOWN GUY GUIDE (THROUGH BOLT TYPE)

DEC 2017 | E2.1Ga

1

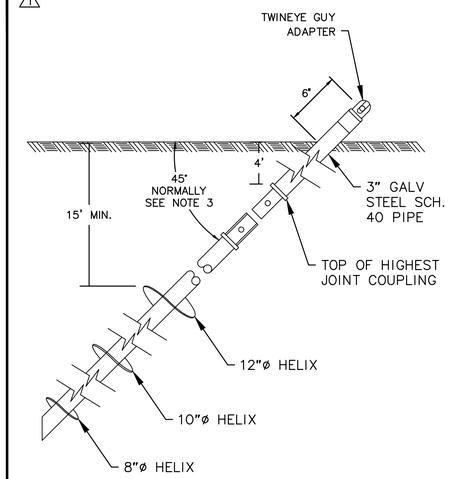

NOTES:
1. USE PILOT DRILL TO PROVIDE MAX 4" DIAMETER HOLE WHEN INSTALLING HELICAL PILES IN PERMAFROST.
2. ADVANCE HELICAL ANCHOR UNTIL THE AVERAGE INSTALLATION TORQUE EXCEEDS THE MINIMUM INSTALLATION TORQUE OF 2,000 FEET–POUNDS OVER THE FINAL THREE FEET OF HELICAL PILE EMBEDMENT OR THE PILES ARE EMBEDDED A MINIMUM OF 9 FEET TO THE UPPER HELIX, WHICHEVER IS DEEPER.
3. UNDER NO CIRCUMSTANCES SHALL THE ROD AND GUY STRAND JOIN AT AN ANGLE OF DEPARTURE EXCEEDING +/– 5 DEGREES.

HELICAL PILE ANCHORS (POWER INSTALLED)

DEC 2017 | F7.0

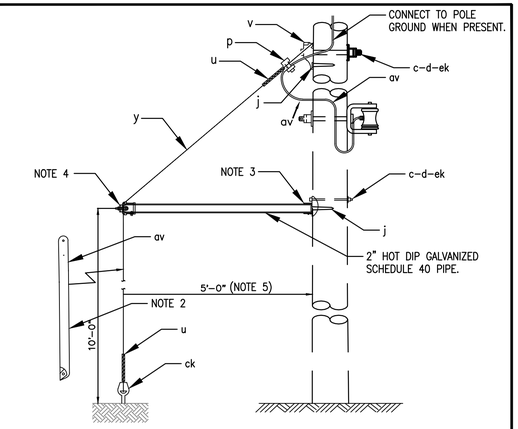

ITEM	QTY	MATERIAL
c	2	Bolt, machine, 5/8" x req'd length
d	1	Washer, 3" square, curved
j	3	Screw, lag, 1/2 x 4
p		Connectors, guy bond and as req'd
u	2	Deadend for guy strand, Preformed
		Line Products. See Specifications.
v	1	Guy attachment,
y		Guy wire, as req'd
at	1	Guy marker
av		Jumpers, as req'd
ck	1	Clamp, anchor bonding
ek	1	Locknuts

NOTES:
1. GUY WIRE SHALL BE 3/8" EHS.
2. INSTALL RED STRIPED REFLECTIVE TAPE ON BOTH SIDES OF GUY GUARD. INSTALL TAPE IN WARM ENVIRONMENT, ABOVE MANUFACTURERS RECOMMENDED TEMPERATURE.
3. 2" POLE PLATE FOR SIDEWALK GUY ARM. HUBBELL CATALOG NO. 0501
4. 2" CLAMP END FITTING FOR SIDEWALK GUY ARM. HUBBELL CATALOG NO. 0502.
5. ADJUST LENGTH AS REQUIRED FOR LOCATION.

SIDE WALK GUY

DEC 2017 | E7.1

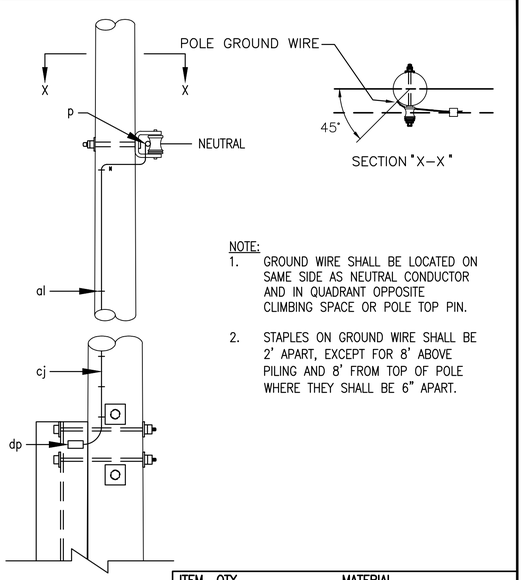

NOTE:
1. GROUND WIRE SHALL BE LOCATED ON SAME SIDE AS NEUTRAL CONDUCTOR AND IN QUADRANT OPPOSITE CLIMBING SPACE OR POLE TOP PIN.
2. STAPLES ON GROUND WIRE SHALL BE 2' APART, EXCEPT FOR 8' ABOVE PILING AND 8' FROM TOP OF POLE WHERE THEY SHALL BE 6" APART.

ITEM	QTY.	MATERIAL
p		CONNECTORS, AS REQUIRED
al		COPPER PLATED STAPLES, AS REQUIRED
cj	1	GROUND WIRE, MINIMUM #4 SOLID COPPER.
dp	1	CADWELD

GROUNDING DETAIL H–PILE

DEC 2017 | H1.1G

NOTE:
1. BOLT HOLES SHALL BE FIELD DRILLED AT 1/8" LARGER THAN BOLT.
2. PILING SHALL BE LOCATED INLINE WITH ADJACENT POLE LOCATIONS.
3. THE SPRING WASHER SHALL BE INSTALLED SO THAT THE SPRING WASHER LAYS HORIZONTAL.
4. THE BUTT OF THE POLE SHALL BE APPROXIMATELY 6" OFF OF THE GROUND.
5. SMALL PIECE OF 3"x3" ANGLE STEEL SHALL BE WELDED ONTO PILING TO SUPPORT POLE DURING INSTALLATION
6. USE H1.1G GROUNDING ASSEMBLY.
7. POLE SHALL BE SNUG AGAINST PILING FOR ITS ENTIRE LENGTH. TIGHTEN BOLTS SEQUENTIALLY AND EVENLY. BOLTS SHALL BE TIGHTENED WITH THE SPRING WASHER COMPLETELY COMPRESSED AND THE SQUARE WASHER AND PILING FLANGE INDENTED INTO THE WOOD POLE 1/16".
8. INSTALLATION DETAIL TYPICAL FOR ALL H–PILE FOUNDATIONS. SEE STAKING SHEET FOR SPECIFIC RUS CONSTRUCTION UNIT REQUIRED.
9. ON EACH SIDE OF THE WOOD POLE, INSTALL A MINIMUM OF 4 REFLECTORS VERTICALLY. REFLECTORS ON THE TWIN HILLS SIDE OF THE POLE SHALL BE YELLOW AND REFLECTORS ON THE TOGIAK SIDE SHALL BE RED. REFLECTORS SHALL BE ALUMINUM, 3–INCH TWO HOLE MOUNTING, ACRYLIC.
10. CUT CHAMFER IN TOP OF PILE TO RELIEVE SHARP EDGES

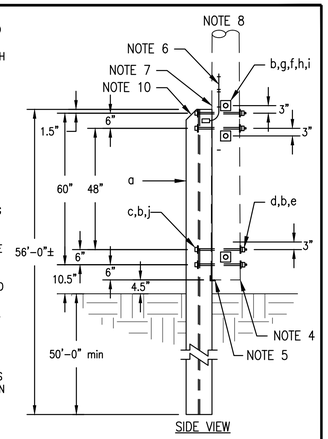

ITEM	QTY.	MATERIAL
a	1	10x57x56' HP STEEL PILING
b	8	SPRING CLIP WASHER, 3/4"
c	4	BOLT, WASHER, 3/4" x REQ'D LENGTH
d	4	WASHER, SQ. CURVED, 4"x4" W/ 13/16" HOLE
e	4	LOCKNUT, 3/4" MF TYPE
f	4	SPRING CLIP WASHER, 5/8"
g	4	BOLT, MACHINE, 5/8" x REQ'D LENGTH
h	8	WASHER, SQ. CURVED, 4"x4" W/ 11/16" HOLE
i	4	LOCKNUT, 5/8" MF TYPE
j	4	WASHER, SQ., 2–1/4"x2–1/4" W/ 13/16" HOLE

POLE FOUNDATION H–PILE INSTALLATION

DEC 2017 | H1–PILE

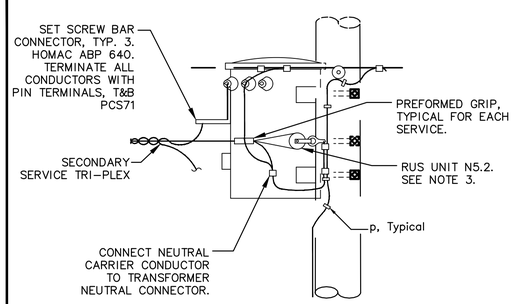

NOTES:
1) THIS CONSTRUCTION UNIT APPLIES ONLY TO SINGLE–PHASE SECONDARY CONNECTIONS AT SINGLE–PHASE TRANSFORMERS. FOR CONNECTIONS THREE–PHASE TRANSFORMERS SEE APPROPRIATE RUS CONSTRUCTION UNIT.
2) FOR POLE GROUNDING, TRANSFORMER GROUNDING, NEUTRAL CONNECTIONS, ETC. SEE THE APPROPRIATE RUS CONSTRUCTION UNIT.
3) FOR SERVICES ON OPPOSITE SIDES OF POLE PROVIDE TWO UNITS. AN EYE NUT MAY BE USED FOR THE SECOND UNIT IF DESIRED BY THE CONTRACTOR.

ITEM	QTY	MATERIAL
p		Connectors, as req'd
–	–	–
av		Jumpers, as req'd

SINGLE–PHASE SECONDARY SERVICE ASSEMBLY

DEC 2017 | N7.6

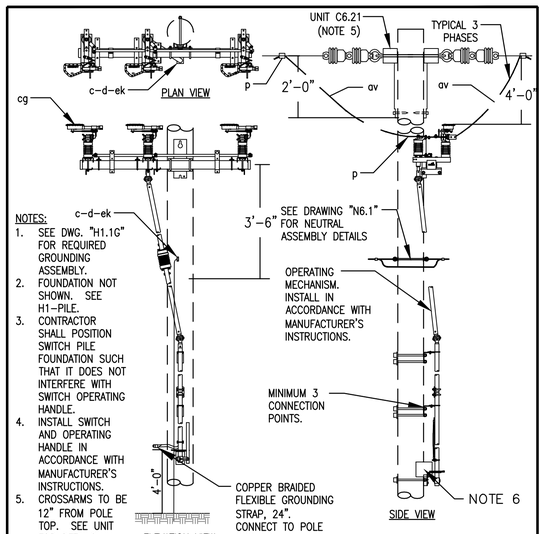

NOTES:
1. SEE DWG. "H1.1G" FOR REQUIRED GROUNDING ASSEMBLY.
2. FOUNDATION NOT SHOWN. SEE H1–PILE.
3. CONTRACTOR SHALL POSITION SWITCH PILE FOUNDATION SUCH THAT IT DOES NOT INTERFERE WITH SWITCH OPERATING HANDLE.
4. INSTALL SWITCH AND OPERATING HANDLE IN ACCORDANCE WITH MANUFACTURER'S INSTRUCTIONS.
5. CROSSARMS TO BE 12" FROM POLE TOP. SEE UNIT FOR DETAILS.
6. PROVIDE SWITCH POSITION SWITCH.

ITEM	QTY.	MATERIAL
c	As Req'd	BOLT, MACHINE, 5/8" X REQ'D LENGTH
d	As Req'd	WASHER, ROUND, 1–3/8"
d	As Req'd	WASHER, SQUARE 2 1/4"
p	As Req'd	CONNECTORS, AS REQ'D

ITEM	QTY.	MATERIAL
av	6	JUMPERS, AS REQ'D
cg	1	SWITCH, LOADBREAK, GANG OPERATED 15 KV, W/OPERATING MECHANISM
ek	As Req'd	LOCKNUTS

GANG OPERATED LOADBREAK SWITCH THREE–PHASE

DEC 2017 | 12.47/7.2 kV | S2.32a

State of Alaska
Department of Commerce, Community and Economic Development
AIDEA/AEA
Rural Energy Group
813 West Northern Lights Blvd.
Anchorage, Alaska 99503
ALASKA ENERGY AUTHORITY

STATE OF ALASKA 49TH REGISTERED PROFESSIONAL ENGINEER EE 7802 CLOIS W. VERSTEEG 08/27/2018

Gray Stassel Engineering, Inc.
P.O. 111405, Anchorage, AK 99511 (907)349-0100

CRW ENGINEERING GROUP, LLC
3940 ARCTIC BLVD. SUITE 300
ANCHORAGE, ALASKA 99503
PHONE: (907) 562–3252
#AECL882–AK

TOGIAK/TWIN HILLS, ALASKA
TOGIAK – TWIN HILLS INTERTIE
DETAILS

NO.	REVISION	BY	DATE
0	ISSUED FOR CONSTRUCTION	TRK	8/2018
1	REVISED PER ADDENDA 1	TRK	10/2018

Plot Date 10/2/18 | Designed CWV | Drawn TRK | Approved CWV

Sheet No. E5.1

File: J:\JobsData\30404.09 Twin Hills RPSU\00 CADD\01 Working Set\03 Electrical\30404.09 DETAILS.dwg

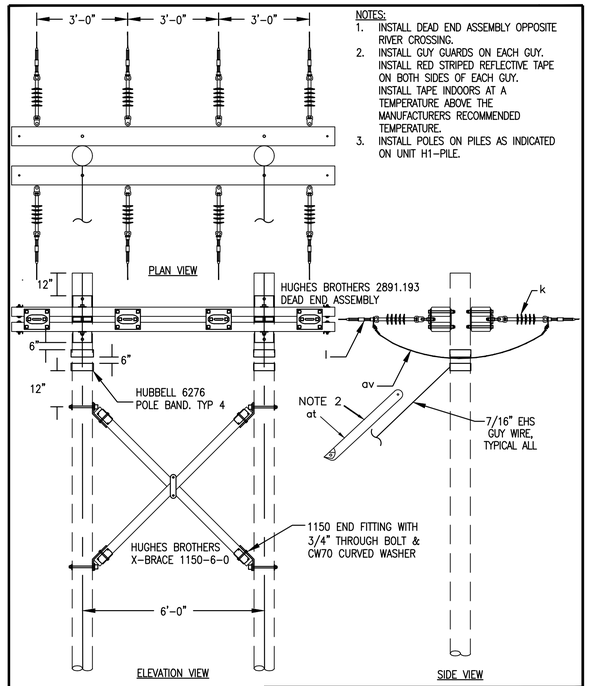

NOTES:
1. INSTALL DEAD END ASSEMBLY OPPOSITE RIVER CROSSING.
2. INSTALL GUY GUARDS ON EACH GUY. INSTALL RED STRIPED REFLECTIVE TAPE ON BOTH SIDES OF EACH GUY. INSTALL TAPE INDOORS AT A TEMPERATURE ABOVE THE MANUFACTURERS RECOMMENDED TEMPERATURE.
3. INSTALL POLES ON PILES AS INDICATED ON UNIT H1-PILE.

EAST CHANNEL TOGIAK RIVER CROSSING
H-FRAME DEADEND

DEC 2017	3 – PHASE PRIMARY 12.47/7.2 kV	H2.1

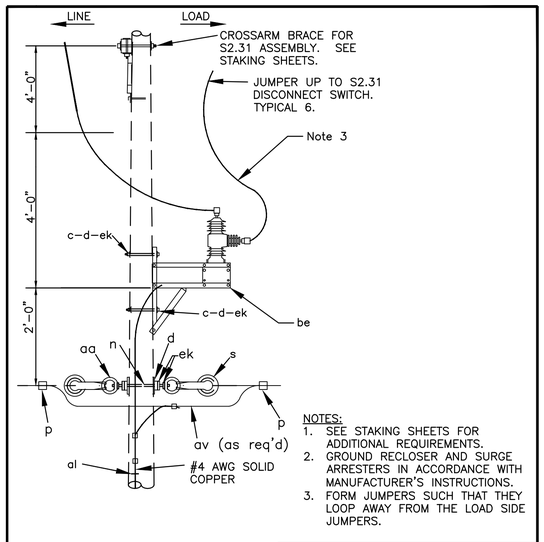

NOTES:
1. SEE STAKING SHEETS FOR ADDITIONAL REQUIREMENTS.
2. GROUND RECLOSER AND SURGE ARRESTERS IN ACCORDANCE WITH MANUFACTURER'S INSTRUCTIONS.
3. FORM JUMPERS SUCH THAT THEY LOOP AWAY FROM THE LOAD SIDE JUMPERS.

ITEM	QTY	MATERIAL
aa	2	Nut, eye, 5/8
al		Staple, ground wire, as required
av		Jumpers, stranded, as required
c	2	Bolt, machine, 1/2 x req'd length
d	2	Washer, square, 2 1/4
g	2	Crossarm, 3 5/8 x 4 5/8 x 8-0
n	3	Bold, double arming, 5/8" X Req'd Length

ITEM	QTY	MATERIAL
be	1	3 Phase Vacuum Switch See Specifications
cu	2	Brace, 28"
ek	2	Locknuts
s	2	Clevis, secondary, swinging, insulated
sb	3	Switch, Line Tension
p		Connector, compression type
p1	9	Connector, compression

THREE-PHASE VACUUM SWITCH

DEC 2017	3 – PHASE PRIMARY 12.47/7.2 kV	R3.3a

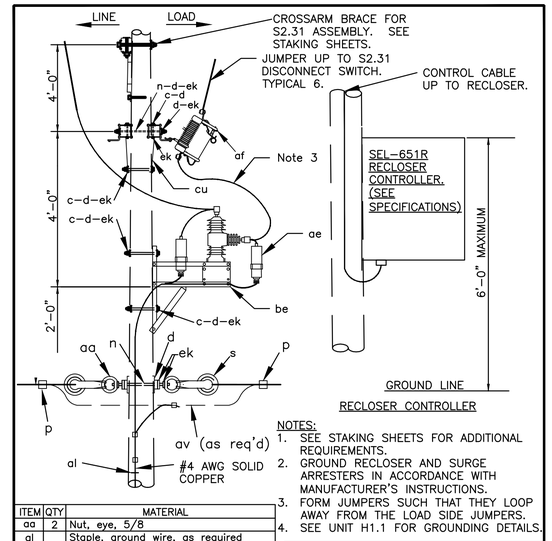

NOTES:
1. SEE STAKING SHEETS FOR ADDITIONAL REQUIREMENTS.
2. GROUND RECLOSER AND SURGE ARRESTERS IN ACCORDANCE WITH MANUFACTURER'S INSTRUCTIONS.
3. FORM JUMPERS SUCH THAT THEY LOOP AWAY FROM THE LOAD SIDE JUMPERS.
4. SEE UNIT H1.1 FOR GROUNDING DETAILS.

ITEM	QTY	MATERIAL
aa	2	Nut, eye, 5/8
al		Staple, ground wire, as required
af	3	Cutout, distribution open (15 kV) Solid Blade, With Crossarm Bracket.
ae	6	Arrester, surge (9 kV)
av		Jumpers, stranded, as required
c	2	Bolt, machine, 1/2 x req'd length
d	2	Washer, square, 2 1/4
g	2	Crossarm, 3 5/8 x 4 5/8 x 8-0
n	3	Bold, double arming, 5/8" X Req'd Length

ITEM	QTY	MATERIAL
be	1	3 Phase Vacuum Switch See Specifications
cu	2	Brace, 28"
ek	2	Locknuts
s	2	Clevis, secondary, swinging, insulated
sb	3	Switch, Line Tension
p		Connector, compression type
p1	9	Connector, compression

THREE-PHASE RECLOSER

DEC 2017	3 – PHASE PRIMARY 12.47/7.2 kV	R3.3b

TRANSFORMER FUSE LINK SCHEDULE

TRANSFORMER SIZE	FUSE LINK SIZE AND TYPE
10KVA	1.4 Amp, SloFast
15KVA	2.1 Amp, SloFast
25 KVA	3.5 Amp, SloFast
37.5 KVA	5.2 Amp, SloFast
75 KVA	10.4 Amp, SloFast
100 KVA	14 Amp, SloFast

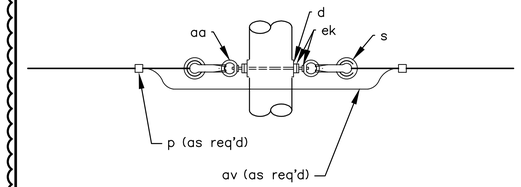

ITEM	QTY	MATERIAL
d	2	Washer, square 3" curve
n	1	Bolt,double arming,5/8" x req'd length
p		Connectors, as req'd
aa	2	Nut, eye, 5/8"
av		Jumpers, as req'd
ek	4	Locknuts
s	2	Clevis, secondary, swinging, insulated

REVISION NO. 1

DESIGN PARAMETERS:

PERMITTED LONGITUDINAL LOADING: 5,000 lbs.

NEUTRAL ASSEMBLY – DOUBLE DEADEND

DEC 2017		N6.1a

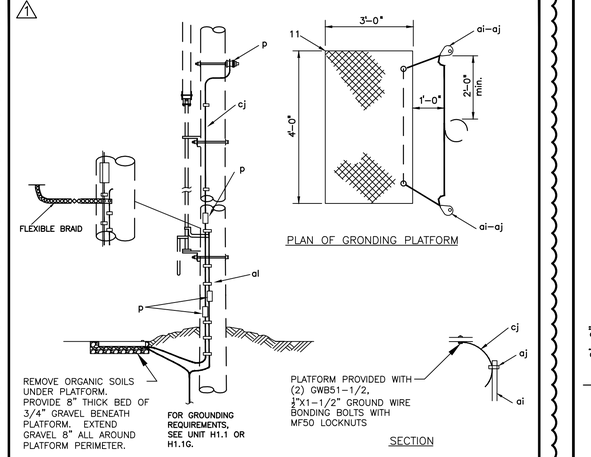

ITEM	QTY	MATERIAL
p		CONNECTOR, CU, COMPR. "C", AS REQ'D.
ai	2	GROUND ROD, 5/8" DIA. X 8'-0"
aj	2	EXOTHERMIC WELD, GROUND ROD
al		STAPLE, GROUND WIRE, CU COATED, AS REQ'D.
cj		GROUND WIRE, #4 STRANDED BARE COPPER AS REQ'D.
11	1	PLATFORM, GROUNDING, 3'-0"X4'-0", WITH TWO GROUNDING CONNECTORS. HUGHES BROS. #AS2137-A.

GROUNDING ASSEMBLY – PLATFORM TYPE

FEB 2018		H4.1a

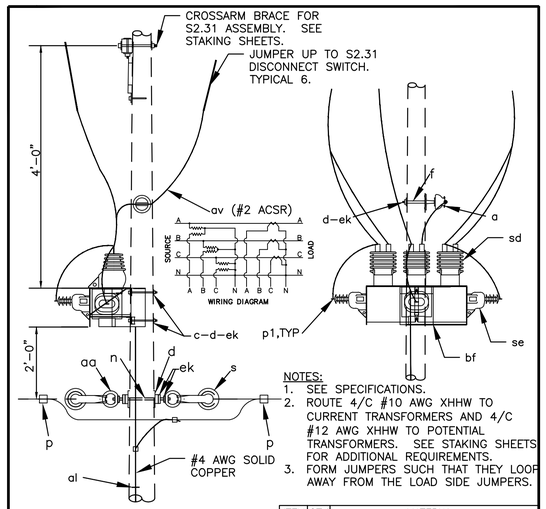

NOTES:
1. SEE SPECIFICATIONS.
2. ROUTE 4/C #10 AWG XHHW TO CURRENT TRANSFORMERS AND 4/C #12 AWG XHHW TO POTENTIAL TRANSFORMERS. SEE STAKING SHEETS FOR ADDITIONAL REQUIREMENTS.
3. FORM JUMPERS SUCH THAT THEY LOOP AWAY FROM THE LOAD SIDE JUMPERS.

ITEM	QTY	MATERIAL
a	1	Insulator, pin type, 15 kV
aa	2	Nut, eye, 5/8
al		Staple, ground wire, as required
ae	6	Arrester, surge (9 kV)
av		Jumpers, stranded, as required
c	2	Bolt, machine, 1/2 x req'd length
d	2	Washer, square, 2 1/4
f	1	Pin, crossarm, steel clamp type
g	2	Crossarm, 3 5/8 x 4 5/8 x 8-0

ITEM	QTY	MATERIAL
n	3	Bold, double arming, 5/8" X Req'd Length
s	2	Clevis, secondary, swinging, insulated
bf	1	3 Phase Primary Meter Mount
cu	2	Brace, 28"
ek	–	Locknuts
sd	3	Transformer, current. Note 1.
se	3	Transformer, potential
p		Connector, compr type, as req'd
p1	9	Connector, compression lug 2-hole. See specifications.

PRIMARY METERING THREE PHASE
(4 WIRE GROUNDED WYE)

DEC 2017	3 – PHASE PRIMARY 12.47/7.2 kV	Q4.1a

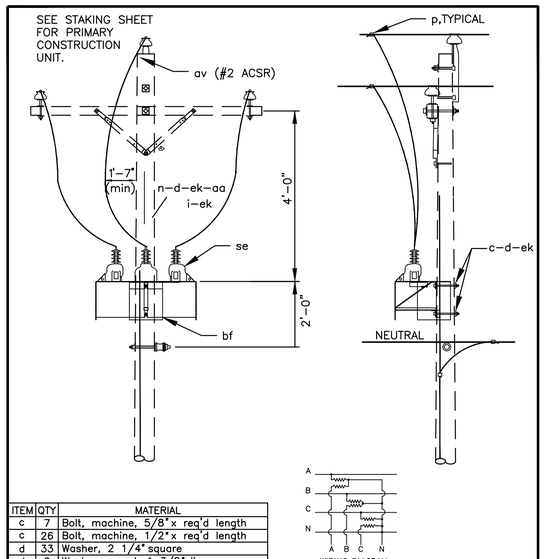

ITEM	QTY	MATERIAL
c	7	Bolt, machine, 5/8" x req'd length
c	26	Bolt, machine, 1/2" x req'd length
d	33	Washer, 2 1/4" square
d	2	Washer, round, 1 3/8" dia.
g	1	Crossarm, 3 5/8" x 4 5/8" x 8-0"
i	2	Bolt, carriage, 3/8" x 4 1/2"
j	1	Screw, lag, 1/2" x 4"
n	1	Bolt,double arming,5/8" x req'd length
p		Connectors, as required
av		Jumper, primary, bare, as required

ITEM	QTY	MATERIAL
al		Staple, ground wire, as required
cu	2	Brace, 28"
se	3	Transformer, potential
bf	1	3 Phase Primary Meter Mount

THREE PHASE POTENTIAL TRANSFORMER
(4 WIRE GROUNDED WYE)

DEC 2017	3 – PHASE PRIMARY 12.47/7.2 kV	Q4.1b

State of Alaska
Department of Commerce, Community and Economic Development
AIDEA/AEA
Rural Energy Group
813 West Northern Lights Blvd.
Anchorage, Alaska 99503
ALASKA ENERGY AUTHORITY

STATE OF ALASKA
49TH
EE 7802
CLOIS W. VERSTEEG
08/27/2018
REGISTERED PROFESSIONAL ENGINEER

Gray Stassel Engineering, Inc.
P.O. 111405, Anchorage, AK 99511 (907)349-0100

CRW ENGINEERING GROUP, LLC
3940 ARCTIC BLVD. SUITE 300
ANCHORAGE, ALASKA 99503
PHONE: (907) 562-3252
#AECL882-AK

TOGIAK/TWIN HILLS, ALASKA
TOGIAK – TWIN HILLS
INTERTIE
DETAILS

NO.	REVISION	BY	DATE
0	ISSUED FOR CONSTRUCTION	TRK	8/2018
1	REVISED PER ADDENDA 1	TRK	10/2018

Plot Date 10/2/18
Designed CWV
Drawn TRK
Approved CWV

Sheet No. E5.2

File: J:\JobsData\30404.09 Twin Hills RPSU\00 CADD\01 Working Set\03 Electrical\30404.09 DETAILS.dwg

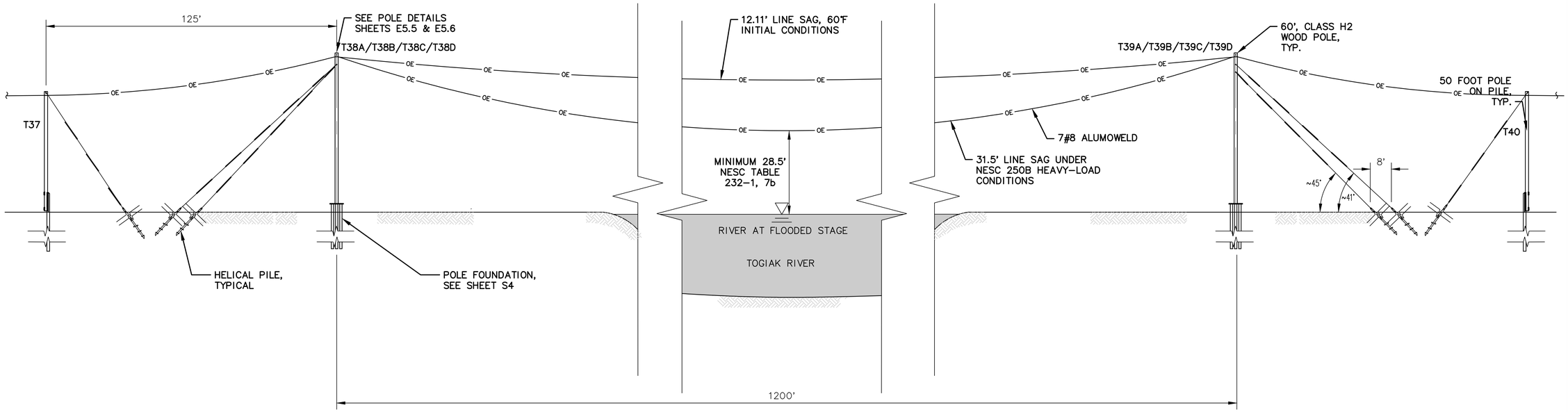

1 / E5.3 **VIEW LOOKING UP RIVER**
SCALE: NTS

GENERAL NOTES

1. DESIGN CONDITIONS FOR RIVER CROSSING ARE AS FOLLOWS:
   a. MINIMUM CLEARANCE IS 28.5 FEET PER NESC TABLE 232-1 FOR A NAVIGABLE RIVER.
   b. RIVER LEVEL AT HIGH TIDE.
   c. THE CONTROLLING CONDITION IS NESC 250B WITH EXTREME WINDS (130 MPH) AND 1/2" RADIAL ICE.
2. ALL WORK ON THIS SHEET SHALL BE BID ITEM 1.

State of Alaska
Department of Commerce, Community and Economic Development
AIDEA/AEA
Rural Energy Group
813 West Northern Lights Blvd.
Anchorage, Alaska 99503
ALASKA ENERGY AUTHORITY

STATE OF ALASKA 49TH REGISTERED PROFESSIONAL ENGINEER EE 7802 CLOIS W. VERSTEEG 08/27/2018

Gray Stassel Engineering, Inc.
P.O. 111405, Anchorage, AK 99511 (907)349-0100

CRW ENGINEERING GROUP, LLC
3940 ARCTIC BLVD. SUITE 300
ANCHORAGE, ALASKA 99503
PHONE: (907) 562-3252
#AECL882-AK

TWIN HILLS, ALASKA
RURAL POWER
SYSTEM UPGRADE
TOGIAK RIVER CROSSING DETAIL
(1 OF 2)

NO.	REVISION	BY	DATE
0	ISSUED FOR CONSTRUCTION	TRK	8/2018

Plot Date 10/2/18
Designed CWV
Drawn TRK
Approved CWV

Sheet No. E5.3

File: J:\JobsData\30404.09 Twin Hills RPSU\00 CADD\01 Working Set\03 Electrical\30404.09 Twin Hills River Crossing Detail.dwg

GENERAL NOTES

1. ALL WORK ON THIS SHEET SHALL BE BID ITEM 1.

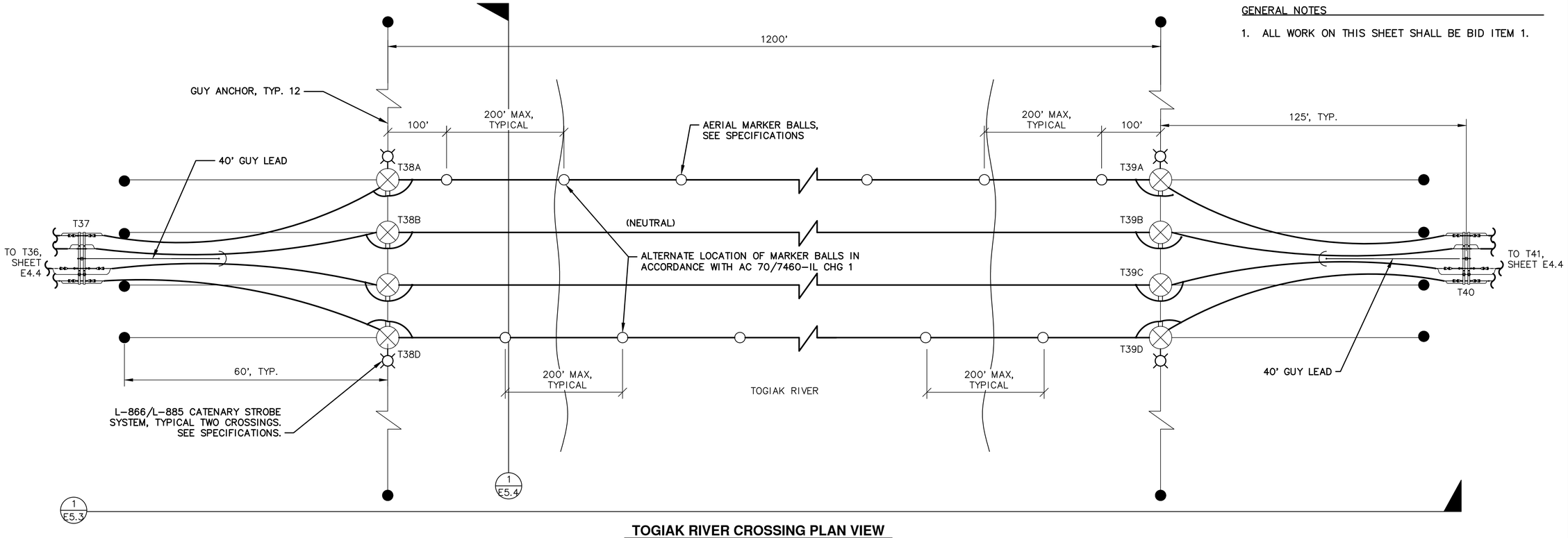

TOGIAK RIVER CROSSING PLAN VIEW

SCALE: NTS

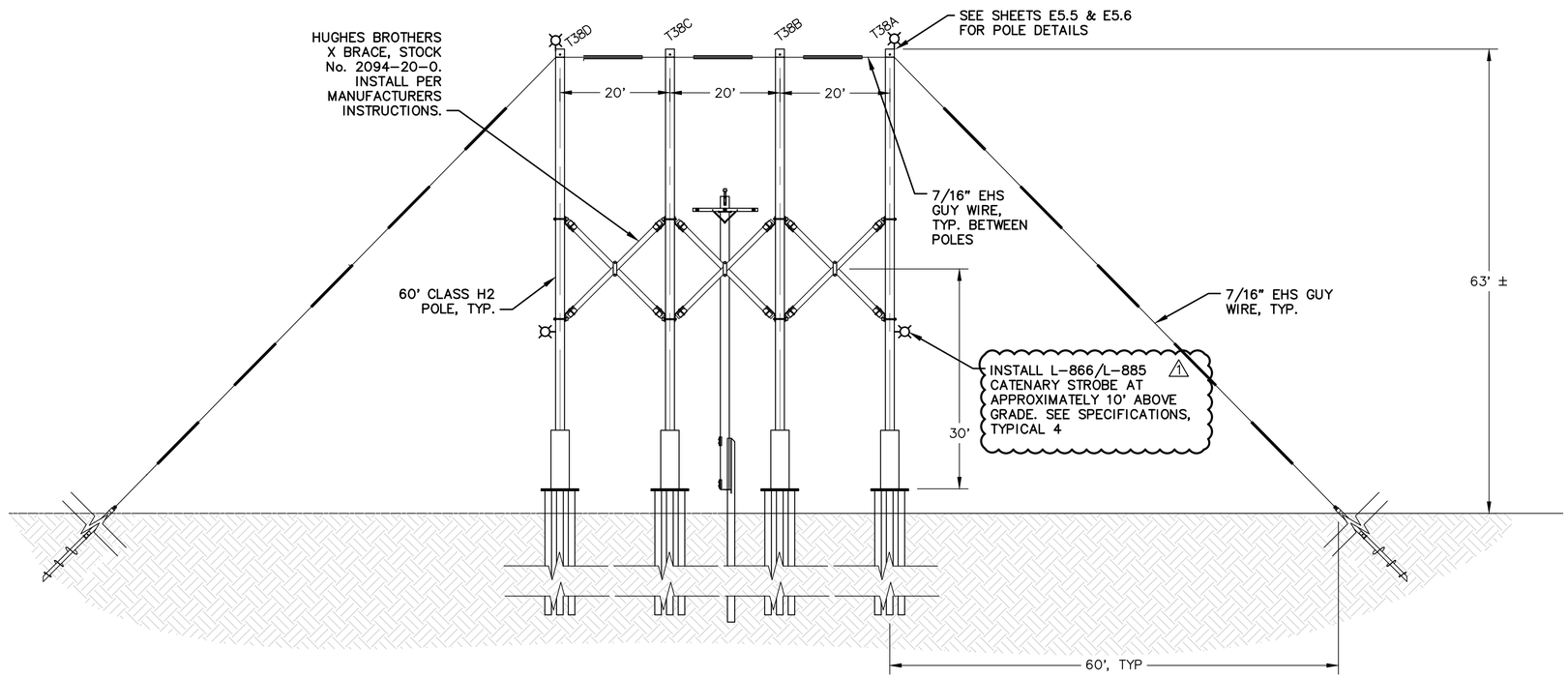

1 E5.4 TOGIAK RIVER CROSSING ELEVATION, TYP. 2

SCALE: NTS

State of Alaska
Department of Commerce, Community and Economic Development
AIDEA/AEA
Rural Energy Group
813 West Northern Lights Blvd.
Anchorage, Alaska 99503
ALASKA ENERGY AUTHORITY

STATE OF ALASKA
49TH
CLOS W. VERSTEEG
EE 7802
08/27/2018
REGISTERED PROFESSIONAL ENGINEER

Gray Stassel Engineering, Inc.
P.O. 111405, Anchorage, AK 99511 (907)349-0100

CRW ENGINEERING GROUP, LLC
3940 ARCTIC BLVD. SUITE 300
ANCHORAGE, ALASKA 99503
PHONE: (907) 562-3252
#AECL882-AK

TWIN HILLS, ALASKA
RURAL POWER SYSTEM UPGRADE
TOGIAK RIVER CROSSING DETAIL (2 OF 2)

NO.	REVISION	BY	DATE
0	ISSUED FOR CONSTRUCTION	TRK	8/2018
1	REVISED PER ADDENDA 1	TRK	10/2018

Plot Date 10/2/18
Designed CWV
Drawn TRK
Approved CWV

Sheet No. E5.4

File: J:\JobsData\30404.09 Twin Hills RPSU\00 CADD\01 Working Set\03 Electrical\30404.09 Twin Hills River Crossing Detail.dwg

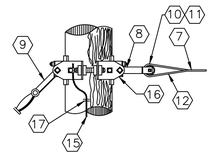

TYPICAL SIDE POLE DETAIL

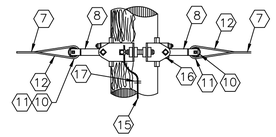

TYPICAL MID POLE DETAIL

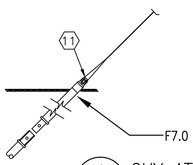

1 E5.5 GUY ATTACHMENT DETAILS
NTS

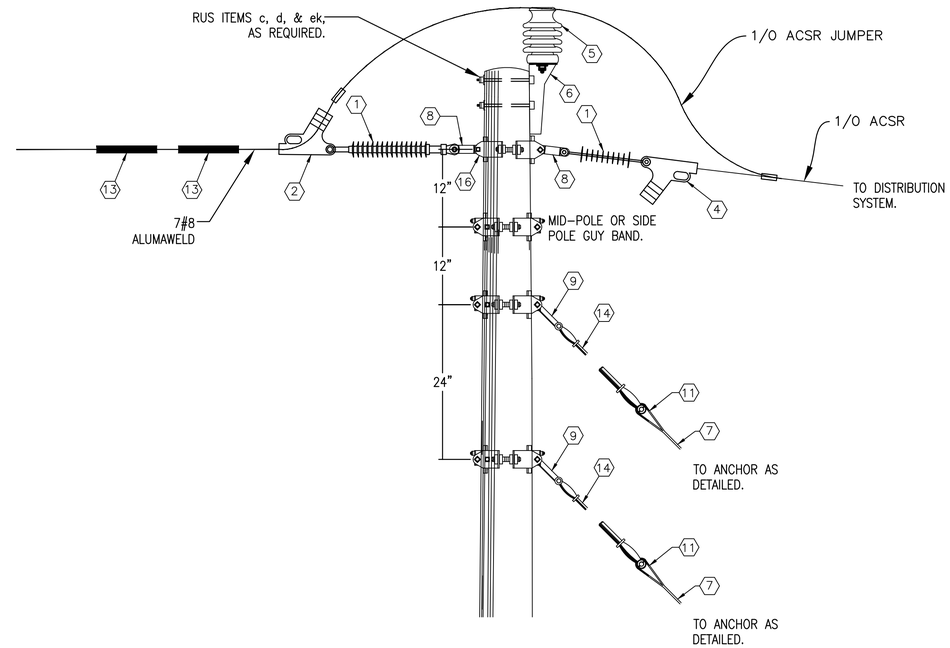

2 E5.5 PRIMARY CONNECTION FOR 1200 FOOT SPAN DETAIL (TYPICAL 4)
NTS

BILL OF MATERIALS

ITEM	DESCRIPTION	MFR. CATALOG No.
1	15 KV QUADRISIL SUSPENSION INSULATOR. 25,000 LB RATING. Y-CLEVIS ON POLE END AND CHAIN EYE ON LINE SIDE.	HUBBELL NO. S025021S200
2	FERROUS QUADRANT DEAD-END. 25,000 LBS RATING. 7#8 ALUMAWELD CLEVIS END ON POLE SIDE.	HUBBELL NO. SWDE84C
3	NOT USED.	
4	ALUMINUM DEAD END STRAIN CLAMP, 20,000 LBS RATING. CLEVIS END ON POLE SIDE.	HUBBELL SD70C
5	INSULATOR, POST TYPE (15 KV).	
6	BRACKET, POLE TOP.	
7	GALVANIZED STEEL CABLE: 7/16", 7-STRAND, EXTRA HIGH STRENGTH.	
8	CONNECTING LINK, 3/8"X3"X12", 45,000 LBS RATING	HUGHES BROS. NO. 3157
9	CONNECTING LINK, 3/8"X3"X10", 45,000 LBS RATING	HUGHES BROS. NO. 3155
10	GUY ROLLER	HUGHES BROS. NO. 28083
11	MACHINE BOLT: 1" x 4" WITH NO. MF100 LOCKNUT	HUGHES BROS. NO. B104-2-3/4
12	GUY GRIP: 7/16", 7 STRAND.	PREFORMED LINE PRODUCTS NO. BG-2148
13	CONDUCTOR VIBRATION DAMPER, HI-MASS. SEE NOTE 1.	PREFORMED LINE PRODUCTS 5050201
14	GUY STRAIN INSULATOR: FIBERGLASS, 6'-6" WITH ROLLER & 2 PINS. 30,000 LBS RATING.	MACLEAN POWER SYSTEMS NO. GCC30-78R
15	GROUND WIRE: NO. 2 AWG BARE COPPER, STRANDED CONDUCTOR.	
16	HEAVY DUTY POLE BAND: 2 WAY 180° (15"-19"), WITH BONDING UNIT. SEE NOTE 4.	HUGHES BROS. NO. 3112.5 WITH NO. 2718.55 BONDING UNIT
17	COPPER PLATED STAPLE. SIZE AS REQUIRED.	
18	15 KV STATION POST INSULATOR, 5" BOLT CIRCLE, TR231	VICTOR NO. 1763
19	BUS SUPPORT, CABLE TO INSULATOR. SEE NOTE 5.	HUBBELL NO. ACS65.

NOTES:

1. CONTRACTOR SHALL PROVIDE THE DAMPER LOCATION ANALYSIS PERFORMED BY THE SUPPLIER OF THE VIBRATION DAMPER BASED ON THE ACTUAL TENSIONS PROVIDED IN THE SAG & TENSION ANALYSIS PROVIDED BY THE CONDUCTOR MANUFACTURE. SEE SPECIFICATIONS.
2. ALL WORK ON THIS SHEET SHALL BE BID ITEM 1.
3. CONTRACTOR SHALL VERIFY ALL HARDWARE AND MISCELLANIES MATERIALS IS PROVIDED AS RECOMMENDED BY THE MANUFACTURER SUCH THAT ALL INSULATORS, DEAD-END CLAMPS, AND OTHER LOAD RATED MATERIALS MEET THE FULL LOAD RATING SPECIFIED FOR THE SPECIFIC PRODUCT.
4. CONTRACTOR SHALL VERIFY THE POLE DIAMETER PRIOR TO ORDERING THE POLE BAND.

State of Alaska
Department of Commerce, Community and Economic Development
AIDEA/AEA
Rural Energy Group
813 West Northern Lights Blvd.
Anchorage, Alaska 99503
ALASKA ENERGY AUTHORITY

STATE OF ALASKA 49TH CHRIS W. VERSTEEG EE 7802 08/27/2018 REGISTERED PROFESSIONAL ENGINEER

Gray Stassel Engineering, Inc.
P.O. 111405, Anchorage, AK 99511 (907)349-0100

CRW ENGINEERING GROUP, LLC
3940 ARCTIC BLVD. SUITE 300
ANCHORAGE, ALASKA 99503
PHONE: (907) 562-3252
#AECL882-AK

TOGIAK/TWIN HILLS, ALASKA
TOGIAK – TWIN HILLS INTERTIE
TOGIAK RIVER CROSSING POLE DETAILS (1 of 2)

NO.	REVISION	BY	DATE
0	ISSUED FOR CONSTRUCTION	TRK	8/2018

Plot Date 10/2/18
Designed CWV
Drawn TRK
Approved CWV

Sheet No. E5.5

File: J:\JobsData\30404.09 Twin Hills RPSU\00 CADD\01 Working Set\03 Electrical\30404.09 DETAILS.dwg

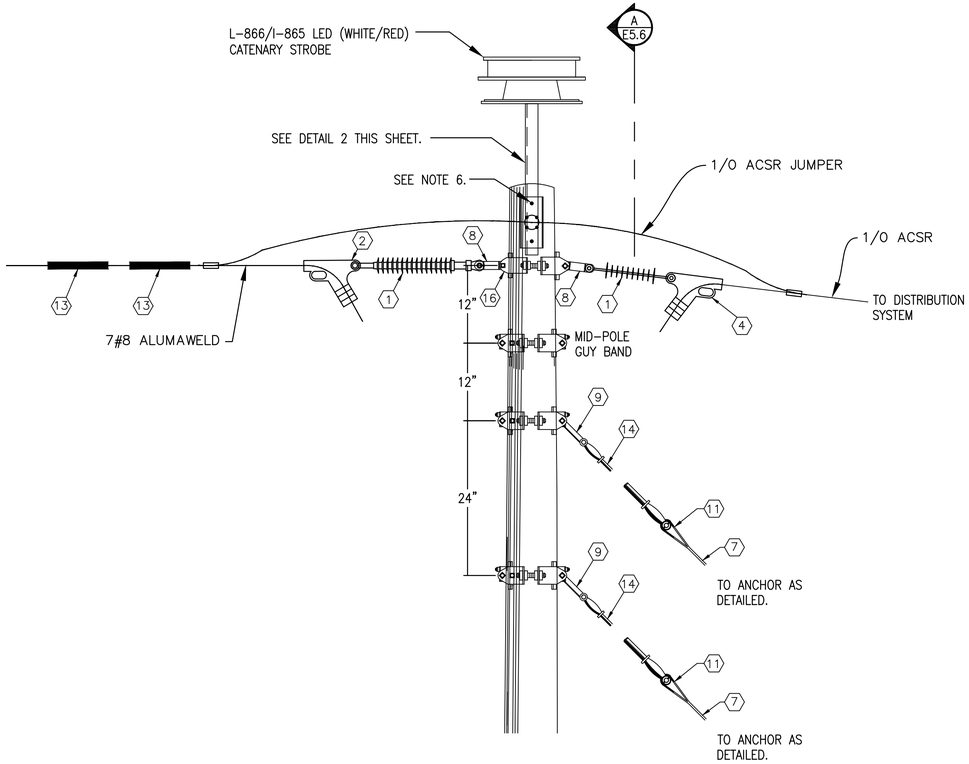

1 E5.6 PRIMARY CONNECTION FOR 1200 FOOT SPAN WITH LIGHT DETAIL (TYPICAL 4)
NTS

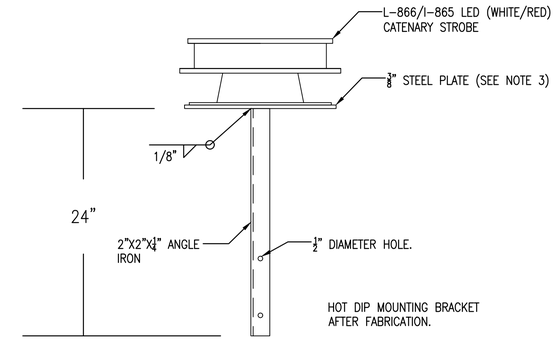

2 E5.6 L-866/L-885 CATENARY LIGHT TOP MOUNTING BRACKET
1-1/2"=1'-0"

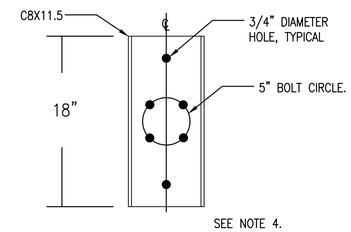

3 E5.6 STANDOFF INSULATOR SUPPORT DETAIL (TYPICAL 2)
1-1/2"=1'-0"

NOTES:

1. CONTRACTOR SHALL PROVIDE THE DAMPER LOCATION ANALYSIS PERFORMED BY THE SUPPLIER OF THE VIBRATION DAMPER BASED ON THE ACTUAL TENSIONS PROVIDED IN THE SAG & TENSION ANALYSIS PROVIDED BY THE CONDUCTOR MANUFACTURE. SEE SPECIFICATIONS.
2. FOR BILL OF MATERIAL, SEE SHEET E5.5
3. PLATE SHALL BE MINIMUM 16" DIAMETER AND SHALL BE PROVIDED WITH BOLT HOLES AS REQUIRED FOR THE FIXTURE. BOLT HOLES SHALL BE DRILLED PRIOR TO HOT DIP GALVANIZING THE MOUNTING BRACKET. ATTACH LIGHT TO BRACKET WITH STAINLESS STEEL BOLTS, FLAT WASHERS, AND LOCKNUTS.
4. HOT DIP GALVANIZE THE INSULATOR SUPPORT AFTER CUTTING AND DRILLING HOLES.
5. REPLACE GALVANIZED STEEL HARDWARE WITH STAINLESS STEEL HARDWARE.
6. INSTALL LIGHT SUPPORT ON OPPOSITE SIDE OF POLE FROM STANDOFF INSULATOR. MATCH BOLT HOLE LOCATIONS IN EACH SUPPORT AND USE SAME BOLTS FOR SUPPORT OF LIGHT AND INSULATOR.

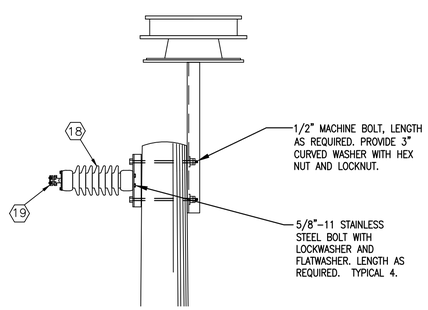

A E5.6 STANDOFF INSULATOR ATTACHMENT DETAIL (TYPICAL)
NTS

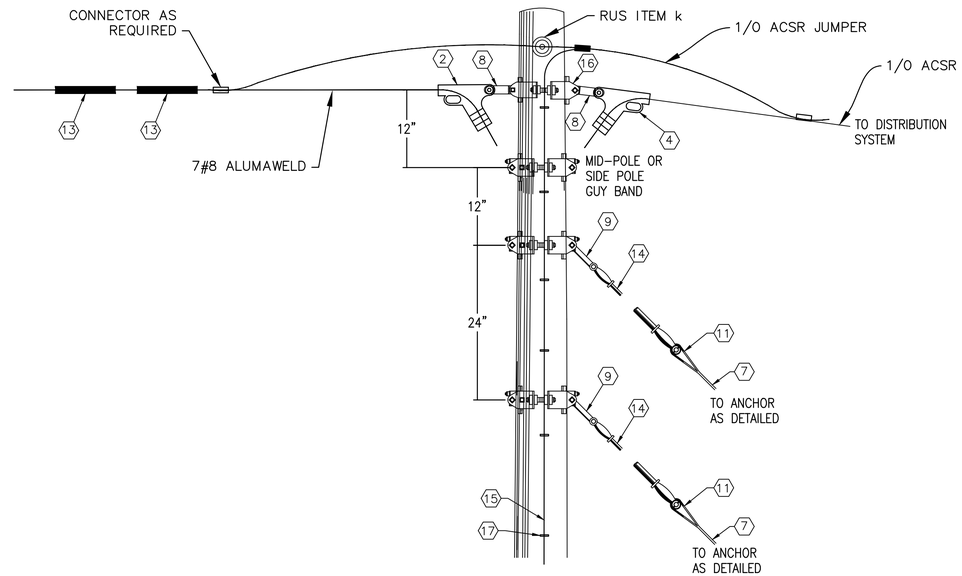

4 E5.6 NEUTRAL CONNECTION FOR 1200 FOOT SPAN (TYPICAL 2)
NTS

State of Alaska
Department of Commerce, Community and Economic Development
AIDEA/AEA
Rural Energy Group
813 West Northern Lights Blvd.
Anchorage, Alaska 99503
ALASKA ENERGY AUTHORITY

STATE OF ALASKA
49TH
EE 7802
CLOIS W. VERSTEEG
08/27/2018
REGISTERED PROFESSIONAL ENGINEER

Gray Stassel Engineering, Inc.
P.O. 111405, Anchorage, AK 99511 (907)349-0100

CRW ENGINEERING GROUP, LLC
3940 ARCTIC BLVD. SUITE 300
ANCHORAGE, ALASKA 99503
PHONE: (907) 562-3252
#AECL882-AK

TOGIAK/TWIN HILLS, ALASKA
TOGIAK – TWIN HILLS INTERTIE
TOGIAK RIVER CROSSING POLE DETAILS (2 of 2)

NO.	REVISION	BY	DATE
0	ISSUED FOR CONSTRUCTION	TRK	8/2018

Plot Date 10/2/18
Designed CWV
Drawn TRK
Approved CWV

Sheet No. E5.6

File: J:\JobsData\30404.09 Twin Hills RPSU\00 CADD\01 Working Set\03 Electrical\30404.09 DETAILS.dwg

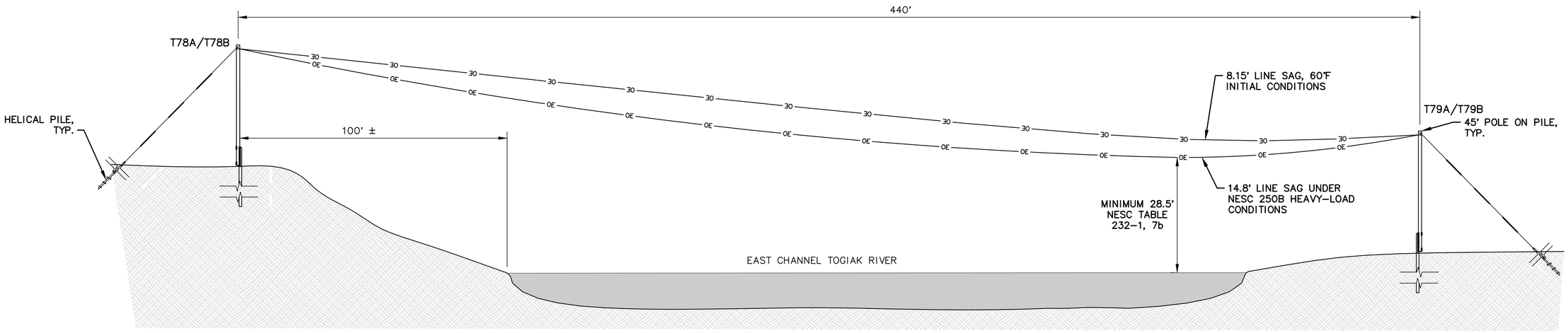

ELEVATION EAST CHANNEL TOGIAK RIVER
VIEW LOOKING UP RIVER

1 / E5.7 SCALE: 1"=20'

GENERAL NOTES

1. DESIGN CONDITIONS FOR RIVER CROSSING ARE AS FOLLOWS:
   a. MINIMUM CLEARANCE IS 28.5 FEET PER NESC TABLE 232-1 FOR A NAVIGABLE RIVER.
   b. RIVER LEVEL AT HIGH TIDE.
   c. THE CONTROLLING CONDITION IS NESC 250B WITH EXTREME WINDS (130 MPH) AND 1/2" RADIAL ICE.
2. ALL WORK ON THIS SHEET SHALL BE BID ITEM 1.

State of Alaska
Department of Commerce, Community and Economic Development
AIDEA/AEA
Rural Energy Group
813 West Northern Lights Blvd.
Anchorage, Alaska 99503
ALASKA ENERGY AUTHORITY

STATE OF ALASKA 49TH REGISTERED PROFESSIONAL ENGINEER EE 7802 CLOIS W. VERSTEEG 08/27/2018

Gray Stassel Engineering, Inc.
P.O. 111405, Anchorage, AK 99511 (907)349-0100

CRW ENGINEERING GROUP, LLC
3940 ARCTIC BLVD. SUITE 300
ANCHORAGE, ALASKA 99503
PHONE: (907) 562-3252
#AECL882-AK

TWIN HILLS, ALASKA
RURAL POWER SYSTEM UPGRADE
EAST CHANNEL TOGIAK RIVER CROSSING

NO.	REVISION	BY	DATE
0	ISSUED FOR CONSTRUCTION	TRK	8/2018

Plot Date 10/2/18
Designed CWV
Drawn TRK
Approved CWV

Sheet No. E5.7

File: J:\JobsData\30404.09 Twin Hills RPSU\00 CADD\01 Working Set\03 Electrical\30404.09 Twin Hills River Crossing Detail.dwg

EQUIPMENT MANUFACTURER AND MODEL REQUIREMENT NOTE (APPLIES TO ALL SCHEDULES):
SPECIFIC PARTS REQUIRED NOT ONLY TO MEET PERFORMANCE FUNCTION BUT IN MANY CASES TO SUPPORT UTILITY REPLACEMENT PART STOCK. PROVIDE EXACT PART INDICATED UNLESS SPECIFICALLY NOTED "OR EQUAL".

ELECTRICAL EQUIPMENT/DEVICE SCHEDULE

SYMBOL	SERVICE	DESCRIPTION	MANUFACTURER/MODEL
SS	208/120V STATION SERVICE POWER	3-PHASE, 4 WIRE, 208/120V, COPPER BUS, MIN 100A RATED, 50A MAIN BREAKER, SURFACE MOUNT, NEMA 1, 24 CIRCUITS	SQUARE D NQ PANELBOARD WITH QO PLUG IN BREAKERS
M-DP M-TL	DIESEL PWR METER TIE LINE METER	120/208 OR 277/480 THREE PHASE INSTRUMENT RATED METER, FORM 9S, ILN, A3TL, INSTALL IN TYPE 3R, SURFACE MOUNT 20A, 600V, 13 TERMINAL METER BASE	ELSTER ZD3210P8082 METER, NO SUBSTITUTES MILBANK UC7237-XL/A BASE OR EQUAL
M-SS	STATION SERVICE METER WITH COMMUNITY COLLECTOR	120/208 OR 277/480 THREE PHASE DIRECT METER, FORM 16S, ILN, A3TL, INSTALL IN TYPE 3R, SURFACE MOUNT, 200A, 600V, 3 PHASE, 4 WIRE, 7 JAW METER BASE	ELSTER ZD3310P8082 METER, NO SUBSTITUTES CIRCLE AW U207 BASE OR EQUAL
DP-SS	208/120V STATION SERVICE POWER	STATION SERVICE TRANSFORMER - DRY TYPE, ENERGY STAR COMPLIANT, ENCLOSURE TYPE 1, 15kVA, HV 480 DELTA, LV 208Y/120	HAMMOND HPS SENTINEL CAT. NO. SG3A0015KB OR EQUAL
1	DAY TANK ALARM	AUDIBLE ALARM, SELECTABLE TONE, 110dB AT 10', 120VAC, NEMA 3R, WITH UNIVERSAL TONE MODULE	FEDERAL SIGNAL CORP 300GC-120 WITH UTM
2	ACTUATOR VALVE CHGOVER SWITCH	CHANGEOVER SWITCH, 2-POSITION 60° WITHOUT OFF, 5-POLE, MIN 16A, 4 HOLE FRONT PANEL MOUNTING, TEAR DROP HANDLE	SALZER MODEL 61041-S-16-B03-TD-YR OR EQUAL
3	DIGITAL THERMOSTAT	MULTIPLE OUTPUT MODULATING DIGITAL THERMOSTAT	HONEYWELL TB7980B
4	AREA/NIGHT LIGHT	AREA LIGHT, WIDE DISPERSION WALL PACK WITH PHOTO CONTROL. LED, 17.7W, 120-277V DRIVER	HUBBELL NRG-356L-5K-U-PC OR EQUAL
5	EMERGENCY LIGHT	WALL MOUNT, WHITE 20 GA STEEL ENCLOSURE, 277/120VAC, 8.4A INPUT, SEALED LEAD-ACID BATTERY, DUAL 5.3W 6VDC LED LAMPS	HUBBEL DUAL-LITE CCU2 OR EQUAL
6	EMERGENCY/EXIT LIGHT COMBO	WHITE PLASTIC ENCLOSURE, RED EXIT SIGN, 277/120V INPUT, DUAL 1.5W 9.6V LED LAMPS. OPTIONAL HIGH OUTPUT NI-CAD BATTERY	LITHONIA LHQM-LED-R-HO OR EQUAL
7	NOT USED	NOT USED	NOT USED
8	MODULE INTERIOR LIGHTING	SURFACE MOUNTED LED STRIPLIGHT FIXTURE, 48" LONG, 34W, 5000°K WITH SNAP ON FROSTED DIFFUSER	LITHONIA L1N-L48-5000LM-FST OR EQUAL
9	NOT USED	NOT USED	NOT USED
10	LIGHT SWITCH	SINGLE POLE SNAP SWITCH, 120V, 20A, METAL, 1-1/2HP RATED, INSTALL IN 4"x4" STEEL BOX WITH METAL COVER, IVORY.	HUBBELL 1221-I OR EQUAL
11	1ø SMALL MOTOR DISCONNECT	SINGLE POLE SNAP SWITCH WITH RED PILOT LIGHT, 120V, 20A, 1-1/2HP RATED, INSTALL IN 4"x4" STEEL BOX WITH METAL COVER	HUBBELL 1221-PL OR EQUAL
12	MOTOR CONTACTOR	IEC STYLE, 23A, 208V, MIN 7.5HP RATED, 120V COIL, NEMA 1 ENCLOSURE, 5.4-27A ADJUSTABLE RANGE SOLID STATE OVERLOAD, HAND/OFF/AUTO CONTROL.	ALLEN BRADLEY 100C23D10, 198EBA966, 193EEEB, & 198MT1 OR EQUAL
13	LARGE MOTOR DISCONNECT	NON-FUSED LOCKABLE SAFETY SWITCH, NEMA 3R ENCLOSURE, 3PST, 600V, 30A, MIN 5HP RATED	SQUARE D HU361RB OR EQUAL
14	RADIATOR TEMPERATURE CONTROLLER	-30°F TO 212°F, 120VAC WITH PTC TEMPERATURE SENSOR, -40°F TO 250°F, PVC JACKETED CABLE, 3" LONG PROBE, 1/2" NPT PROCESS CONNECTION	JOHNSON CONTROLS PENN A421ABC-02C & WEL11A-601R OR EQUAL
15	STANDARD RECEPTACLE	SURFACE MOUNT 125V NEMA 5-20R RECEPTACLE. INSTALL IN 4"x4" STEEL BOX WITH METAL COVER	PASS & SEYMOUR LEGRAND 5362W OR EQUAL
16	LOW TEMP ALARM THERMOSTAT	LINE VOLTAGE HEATING THERMOSTAT, 120V, 16A, 35F TO 95F RANGE	JOHNSON CONTROLS A19BAB-3C OR EQUAL
17	BATTERY CHARGER	12/24-VOLT SOLID STATE 20-AMP AUTO-EQUALIZING BATTERY CHARGER FOR 120 VAC INPUT, WITH OPTIONAL HIGH/LOW VOLTAGE, AC POWER FAILURE, & REMOTE SUMMARY ALARM RELAYS	SENS NRG22-20-RCLS OR EQUAL

ELECTRICAL CONDUCTOR SCHEDULE

SERVICE/FUNCTION	DESCRIPTION	MANUFACTURER/MODEL	NOTES:
GENERATOR LEADS & FEEDERS (480V) & ENGINE STARTER CABLES (24VDC)	HIGH TEMPERATURE, EXTRA FLEXIBLE CABLE. 1000V, 150°C THERMOSET EPDM INSULATION, TIN COATED COPPER CONDUCTOR.	COBRA CABLE, HOUSTON WIRE & CABLE, OR APPROVED EQUAL.	TERMINATE WITH COPPER COMPRESSION LUGS RATED FOR THE FULL AMPACITY OF THE CABLE AT 150°C.
GENERAL USE CONDUCTORS	CLASS B CONCENTRIC STRANDED, SOFT DRAWN COPPER. TYPE XHHW INSULATION, 600V AND 75C RATED.		
POWER PLANT SHIELDED/TWISTED INSTRUMENT & CONTROL CONDUCTORS	#18 AWG STRANDED TINNED COPPER CONDUCTORS, 600V POLYETHYLENE INSULATION, 100% COVERAGE ALUMINUM FOIL-POLYESTER TAPE SHIELD WITH STRANDED TINNED COPPER DRAIN WIRE & PVC OUTER JACKET	SINGLE PAIR: BELDEN #1120A FOUR PAIR: BELDEN #1049A SINGLE TRIAD: BELDEN #1121A	APPROVED EQUALS ACCEPTABLE. GROUND SHIELD DRAIN WIRE AT PANEL END ONLY. DO NOT ROUTE IN WIREWAY WITH 120V OR 480V CONDUCTORS.
TANK FARM SHIELDED/TWISTED LEVEL SENSOR CONDUCTORS	#22 AWG STRANDED (7X30) TINNED COPPER CONDUCTORS, 300V POLYETHYLENE INSULATION, 100% COVERAGE ALUMINUM FOIL-POLYESTER TAPE SHIELD WITH STRANDED TINNED COPPER DRAIN WIRE & PVC OUTER JACKET	SINGLE PAIR: BELDEN #8761	APPROVED EQUALS ACCEPTABLE. GROUND SHIELD DRAIN WIRE AT PANEL END ONLY. DO NOT ROUTE IN WIREWAY WITH 120V OR 480V CONDUCTORS.

COLOR CODING - UNLESS SPECIFICALLY INDICATED OTHERWISE CONDUCTORS SHALL BE COLOR CODED AS FOLLOWS:

- 480-VOLT POWER CONDUCTORS
  - PHASE A - BROWN
  - PHASE B - ORANGE
  - PHASE C - YELLOW
  - NEUTRAL - WHITE WITH YELLOW STRIPE
- 120/208-VOLT POWER CONDUCTORS
  - PHASE A - BLACK
  - PHASE B - RED
  - PHASE C - BLUE
  - NEUTRAL - WHITE
- 24 VOLT DC CONDUCTORS
  - +24VDC - RED WITH GRAY STRIPE
  - -24VDC - BLACK WITH GRAY STRIPE
- CONTROL & INSTRUMENT CONDUCTORS
  - COLOR CODED PER MANUFACTURER'S STANDARD

NOTES:

1) FOR NO. 6 AWG AND SMALLER CONDUCTORS COLOR CODING SHALL BE PROVIDED BY USING CONDUCTORS WITH CONTINUOUS COLOR EMBEDDED IN THE INSULATION. FOR ALL CONDUCTORS LARGER THAN NO. 6 SCOTCH 35 MARKING TAPE OR EQUIVALENT MAY BE USED TO COLOR CODE THE CABLE. WHERE MARKING TAPE IS USED THE CABLE SHALL BE IDENTIFIED AT EVERY ACCESSIBLE LOCATION. PROVIDE A MINIMUM OF 2 INCHES OF TAPE AT EACH LOCATION.

2) GROUNDING - PROVIDE A SEPARATE EQUIPMENT GROUNDING CONDUCTOR IN EACH RACEWAY. DO NOT USE THE CONDUIT AS AN EQUIPMENT GROUNDING CONDUCTOR. EQUIPMENT GROUNDING CONDUCTORS SHALL BE CLASS B CONCENTRIC STRANDED, SOFT-DRAWN COPPER OF THE SIZES INDICATED ON THE DRAWINGS. CONDUCTORS NOT INDICATED SHALL BE SIZED IN ACCORDANCE WITH THE NATIONAL ELECTRICAL CODE.

INSTRUMENTATION EQUIPMENT SCHEDULE

NOTE: INSTRUMENTATION SHOWN HERE FOR COORDINATION PURPOSES. FURNISH ALL INSTRUMENTATION DEVICES UNDER DIVISION 23 MECHANICAL.

SYMBOL	SERVICE/FUNCTION	DESCRIPTION	MANUFACTURER/MODEL
TLM	TANK LEVEL MONITOR PANEL	TANK LEVEL MONITOR CONSOLE FOR UP TO SIX TANKS, COLOR LCD SCREEN, ETHERNET CONNECTION WITH WEB INTERFACE, PROGRAMMABLE VOLUME CALCULATIONS WITH TEMP. COMPENSATION	FRANKLIN/INCON COLIBRI CL6D
LS	TANK LEVEL SENSOR PROBE	TOP-MOUNT TANK PROBE WITH INSTALLATION KIT FOR 2" NPT RISER, WATER TIGHT COMPRESSION GLAND FITTING FOR CABLE ENTRANCE. FRANKLIN FUEL SYSTEMS, NO SUBSTITUTES. PROBE AND RISER LENGTH AS INDICATED ON INSTALLATION DETAILS.	12' TANK PROBE: TSP-LL2-149-I 4' TANK PROBE: TSP-LL2-53-I FLOAT: INTSP-IDF2 2" FOR DSL INSTALLATION KIT: TSP-K2A
FS	DAY TANK/HOPPER FLOAT SWITCH	VERTICAL ACTION FLOAT SWITCH, REVERSIBLE 70VASPST NC/NO SWITCH, 1/8" NPT, 1"MAX ø BUNA-N FLOAT FOR S.G=.47, MINIMUM 60" LONG PVC COATED #20 AWG LEAD WIRES	INNOVATIVE COMPONENTS LS-12-111/2
LCA	GLYCOL EXP TANK	LOW COOLANT ALARM FLOAT SWITCH, SEE MECHANICAL DETAILS	MURPHY EL-150-K1

NOTES
ALL WORK ON THIS SHEET SHALL BE ADDITIVE ALTERNATE B.

ALASKA ENERGY AUTHORITY

STATE OF ALASKA 49TH REGISTERED PROFESSIONAL ENGINEER CLOIS W. VERSYP EE 7802

CRM ENGINEERING GROUP LLC PHONE: (907) 562-3252

Grey Stassel Engineering, Inc. PHONE: (907) 346-0100

TWIN HILLS, ALASKA
TWIN HILLS RPSU PROJECT

STANDBY MODULE
LEGEND & SCHEDULES

NO.	REVISION	BY	DATE
0	ISSUED FOR CONSTRUCTION	CWV	1/26/18

Plot Date 1/26/18
Designed CWV/BCG
Drawn JTD
Approved CWV

Sheet No.
E6.1

NOTES:

1) FOR ALL GRC CLEAN & DE-GREASE THREADS AFTER CUTTING & SPRAY WITH COLD GALV PRIOR TO ASSEMBLY.
2) NEW ELECTRICAL TO BULK TANKS SERVE DIESEL FUEL ONLY AND THERE ARE NO CLASSIFIED AREAS.
3) SEE DISTRIBUTION DRAWINGS AND STAKING SHEETS FOR POLE, TRANSFORMER, AND POLE GROUNDING DETAILS.
4) ALL CONTROL CONDUCTORS TYPE XHHW LASHED CONTINUOUSLY TO 1/4" STAINLESS STEEL MESSENGER CABLE. SEE SHEET E7.1 FOR CONNECTIONS.
5) LASH ETHERNET AND COAX CABLES CONTINUOUSLY TO 1/4" STAINLESS STEEL MESSENGER CABLE. SEE SHEET E8.1 FOR CONNECTIONS.

NOTE:
ALL WORK ON THIS SHEET SHALL BE ADDITIVE ALTERNATE B.

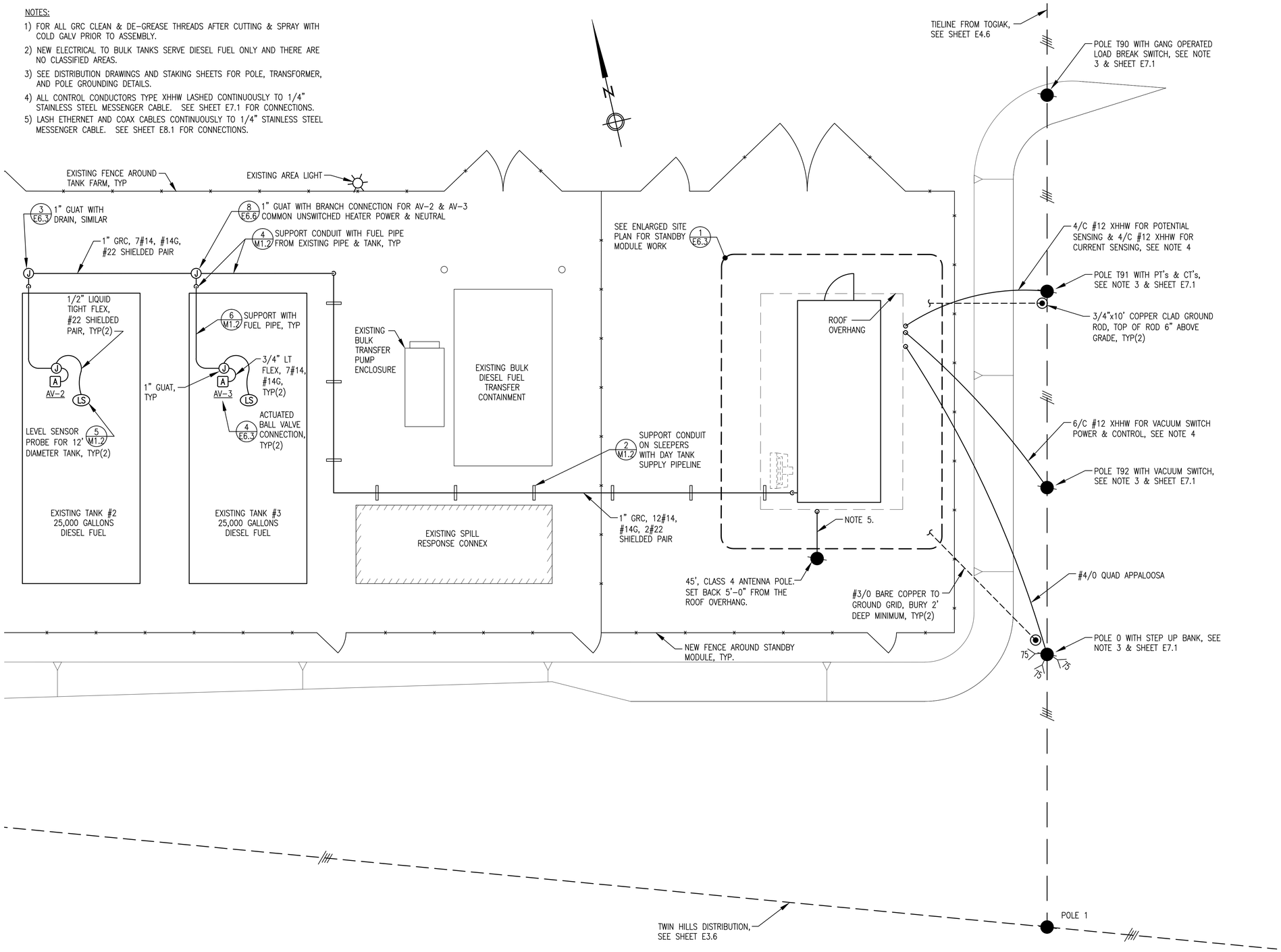

1 E6.2 SITE PLAN
1" = 5'

ALASKA ENERGY AUTHORITY

STATE OF ALASKA 49TH REGISTERED PROFESSIONAL ENGINEER CLOIS W. VERSYP EE 7802

CRM ENGINEERING GROUP LLC PHONE: (907) 562-3252

Gray Stassel Engineering, Inc. PHONE: (907) 349-0100

TWIN HILLS, ALASKA
TWIN HILLS RPSU PROJECT

STANDBY MODULE SITE PLAN

NO.	REVISION	BY	DATE
0	ISSUED FOR CONSTRUCTION	CWV	1/26/18

Plot Date 1/26/18
Designed CWV/BCG
Drawn JTD
Approved CWV

Sheet No. E6.2

NOTE:
ALL WORK ON THIS SHEET SHALL BE ADDITIVE ALTERNATE B.

NOTES:

1) CAD-WELD ALL GROUNDING GRID CABLE AND GROUND ROD CONNECTIONS.

2) FOR ALL GRC CLEAN & DE-GREASE THREADS AFTER CUTTING & SPRAY WITH COLD GALV PRIOR TO ASSEMBLY.

3) EXTEND CONDUIT INSIDE MODULE AND TERMINATE WITH A CONDUIT BUSHING.

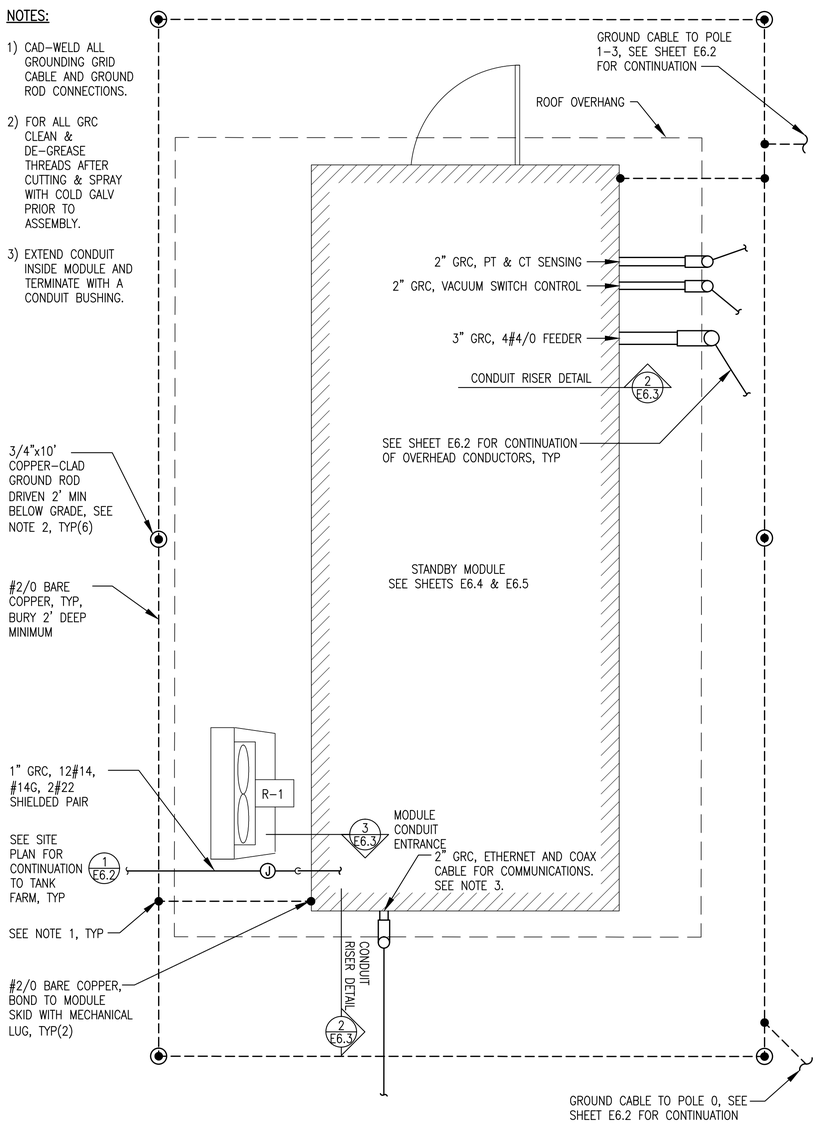

1 E6.3 ENLARGED SITE PLAN
1/2"=1'-0"

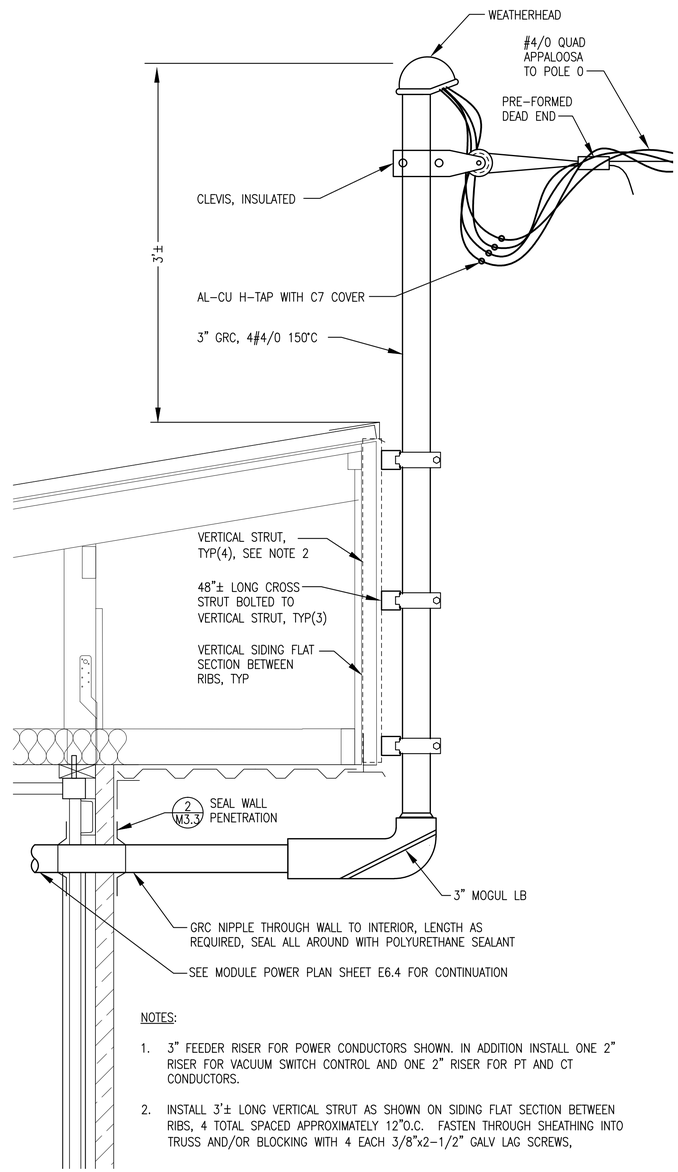

NOTES:

1. 3" FEEDER RISER FOR POWER CONDUCTORS SHOWN. IN ADDITION INSTALL ONE 2" RISER FOR VACUUM SWITCH CONTROL AND ONE 2" RISER FOR PT AND CT CONDUCTORS.

2. INSTALL 3'± LONG VERTICAL STRUT AS SHOWN ON SIDING FLAT SECTION BETWEEN RIBS, 4 TOTAL SPACED APPROXIMATELY 12"O.C. FASTEN THROUGH SHEATHING INTO TRUSS AND/OR BLOCKING WITH 4 EACH 3/8"x2-1/2" GALV LAG SCREWS,

2 E6.3 FEEDER RISER DETAIL
NO SCALE

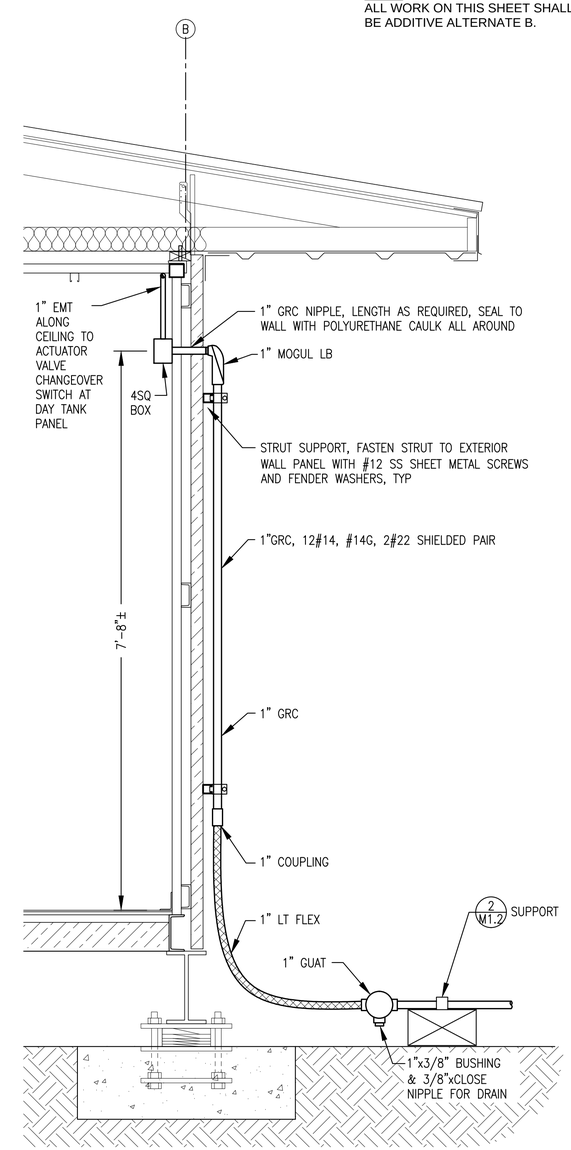

3 E6.3 MODULE CONDUIT ENTRANCE
NO SCALE

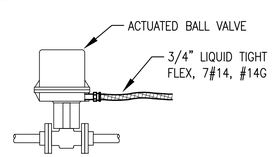

NOTE:
ACTUATOR VALVE CONTROLLED FROM DAY TANK CONTROL PANEL IN MODULE. SEE DETAIL 8/E6.6 FOR TERMINATIONS.

4 E6.3 ACTUATOR VALVE CONNECTION
NO SCALE

ALASKA ENERGY AUTHORITY

STATE OF ALASKA 49TH REGISTERED PROFESSIONAL ENGINEER CLOIS W. VERSYP EE 7862

CRM ENGINEERING GROUP LLC PHONE: (907) 562-3252

Gray Stassel Engineering, Inc. PHONE: (907) 349-0100

TWIN HILLS, ALASKA
TWIN HILLS RPSU PROJECT

STANDBY MODULE
ENLARGED SITE PLAN & DETAILS

NO.	REVISION	BY	DATE
0	ISSUED FOR CONSTRUCTION	CWV	1/26/18

Plot Date 1/26/18
Designed CWV/BCG
Drawn JTD
Approved CWV

Sheet No.
E6.3

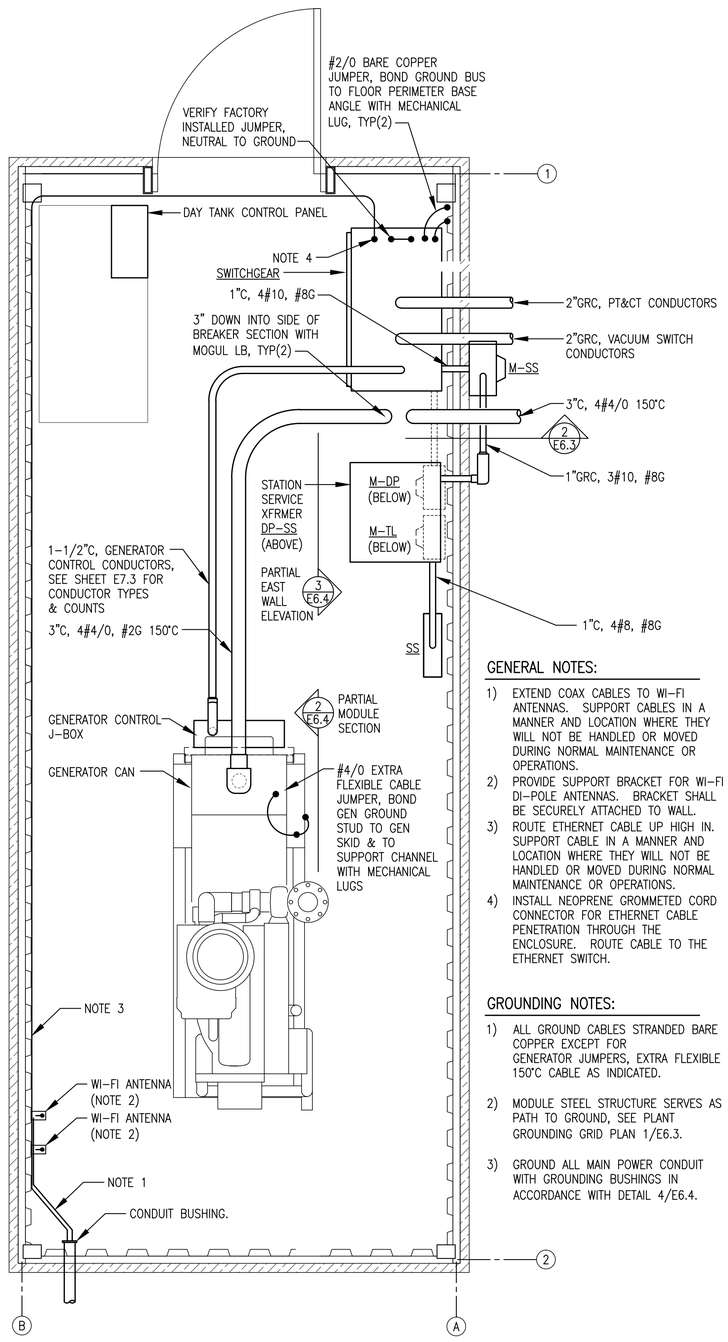

1 E6.4 MODULE POWER, CONTROL & EQUIPMENT LAYOUT PLAN
3/4"=1'-0"

GENERAL NOTES:

1) EXTEND COAX CABLES TO WI-FI ANTENNAS. SUPPORT CABLES IN A MANNER AND LOCATION WHERE THEY WILL NOT BE HANDLED OR MOVED DURING NORMAL MAINTENANCE OR OPERATIONS.
2) PROVIDE SUPPORT BRACKET FOR WI-FI DI-POLE ANTENNAS. BRACKET SHALL BE SECURELY ATTACHED TO WALL.
3) ROUTE ETHERNET CABLE UP HIGH IN. SUPPORT CABLE IN A MANNER AND LOCATION WHERE THEY WILL NOT BE HANDLED OR MOVED DURING NORMAL MAINTENANCE OR OPERATIONS.
4) INSTALL NEOPRENE GROMMETED CORD CONNECTOR FOR ETHERNET CABLE PENETRATION THROUGH THE ENCLOSURE. ROUTE CABLE TO THE ETHERNET SWITCH.

GROUNDING NOTES:

1) ALL GROUND CABLES STRANDED BARE COPPER EXCEPT FOR GENERATOR JUMPERS, EXTRA FLEXIBLE 150°C CABLE AS INDICATED.
2) MODULE STEEL STRUCTURE SERVES AS PATH TO GROUND, SEE PLANT GROUNDING GRID PLAN 1/E6.3.
3) GROUND ALL MAIN POWER CONDUIT WITH GROUNDING BUSHINGS IN ACCORDANCE WITH DETAIL 4/E6.4.

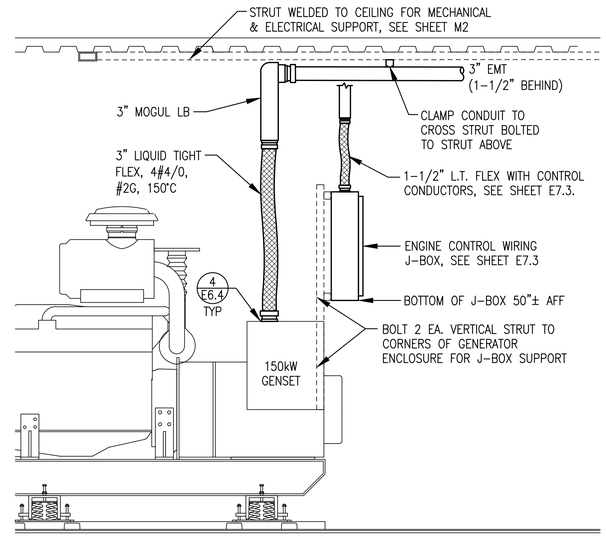

2 E6.4 PARTIAL BUILDING SECTION
3/4"=1'-0"

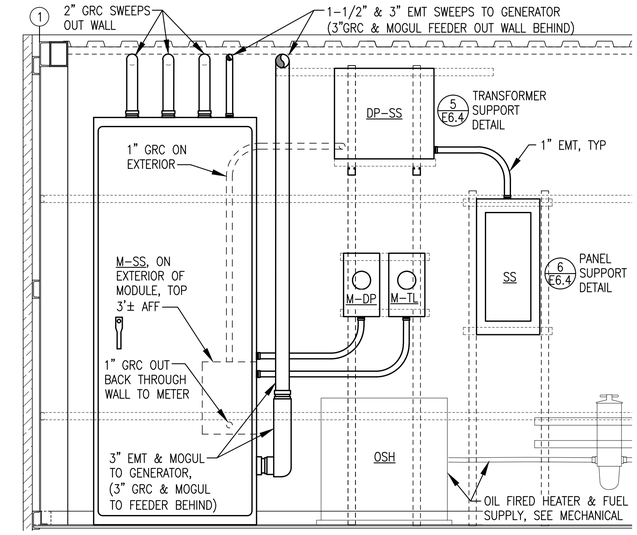

3 E6.4 PARTIAL EAST WALL ELEVATION
3/4"=1'-0"

NOTES:
1) THIS DETAIL APPLIES TO CONNECTIONS TO WIREWAY, GENERATOR ENCLOSURES, SWITCHGEAR, AND PANELS.
2) AT A MINIMUM INSTALL GROUNDING BUSHING ON GENERATOR POWER CONDUIT, COMMUNITY FEEDER CONDUIT, STATION SERVICE FEEDERS, AND WHERE OTHERWISE INDICATED OR REQUIRED. BOND GROUNDING BUSHING TO EQUIPMENT GROUNDING CONDUCTOR.
3) INSTALL PLASTIC BUSHING WHERE GROUNDING BUSHING IS NOT REQUIRED.
4) ON GENERATOR ENCLOSURES MAKE ALL CONNECTIONS AS TIGHT AS POSSIBLE.

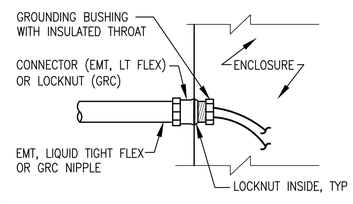

4 E6.4 TYP ENCLOSURE CONNECTION
NO SCALE

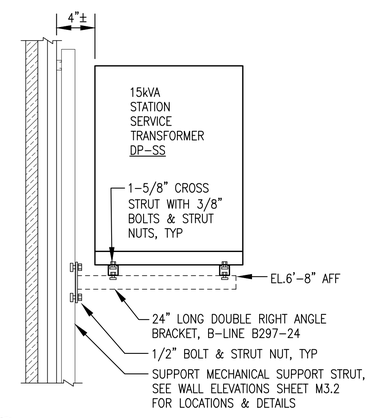

5 E6.4 DRY PACK SUPPORT
NO SCALE

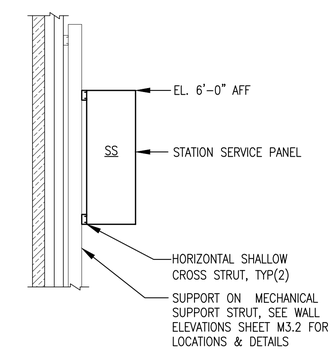

6 E6.4 PANEL BOARD SS SUPPORT
NO SCALE

BUILDING PLANS SYMBOL LEGEND

SYMBOL	DESCRIPTION	SYMBOL	DESCRIPTION
SS-##	HOME RUN TO PANEL & BREAKER(S) INDICATED. SHORT DASH INDICATES HOT CONDUCTOR, LONG DASH INDICATES NEUTRAL CONDUCTOR, CURVED DASH INDICATES GROUND CONDUCTOR. IF NOT SPECIFICALLY INDICATED, PROVIDE 2#12 AWG & 1#12 AWG GROUND.	T	LINE VOLTAGE THERMOSTAT
#	ELECTRICAL ITEM – SEE EQUIPMENT SCHEDULE ON SHEET E6.1	DT	DIGITAL THERMOSTAT, MODULATING
1/4	MOTOR (HORESPOWER INDICATED)	MC	MOTOR CONTACTOR
	GROUND	TC	TEMPERATURE CONTROLLER
	125V, 20A, DUPLEX RECEPTACLE	MD	MOTORIZED DAMPER – SEE MECHANICAL
$	SNAP SWITCH / SMALL MOTOR DISCONNECT	LS	TANK LEVEL SENSOR
		FS	TANK FLOAT SWITCH

NOTE:
ALL WORK ON THIS SHEET SHALL BE ADDITIVE ALTERNATE B.

ALASKA ENERGY AUTHORITY

STATE OF ALASKA 49TH CLOSS M. KRUSE EE 7802 REGISTERED PROFESSIONAL ENGINEER

CRW ENGINEERING GROUP LLC PHONE: (907) 562-3252

Gray Stassel Engineering, Inc. PHONE: (907) 349-0100

TWIN HILLS, ALASKA
TWIN HILLS RPSU PROJECT

STANDBY MODULE POWER PLAN & DETAILS

NO.	REVISION	BY	DATE
0	ISSUED FOR CONSTRUCTION	CWV	1/26/18

Plot Date 1/26/18
Designed CWV/BCG
Drawn JTD
Approved CWV

Sheet No. E6.4

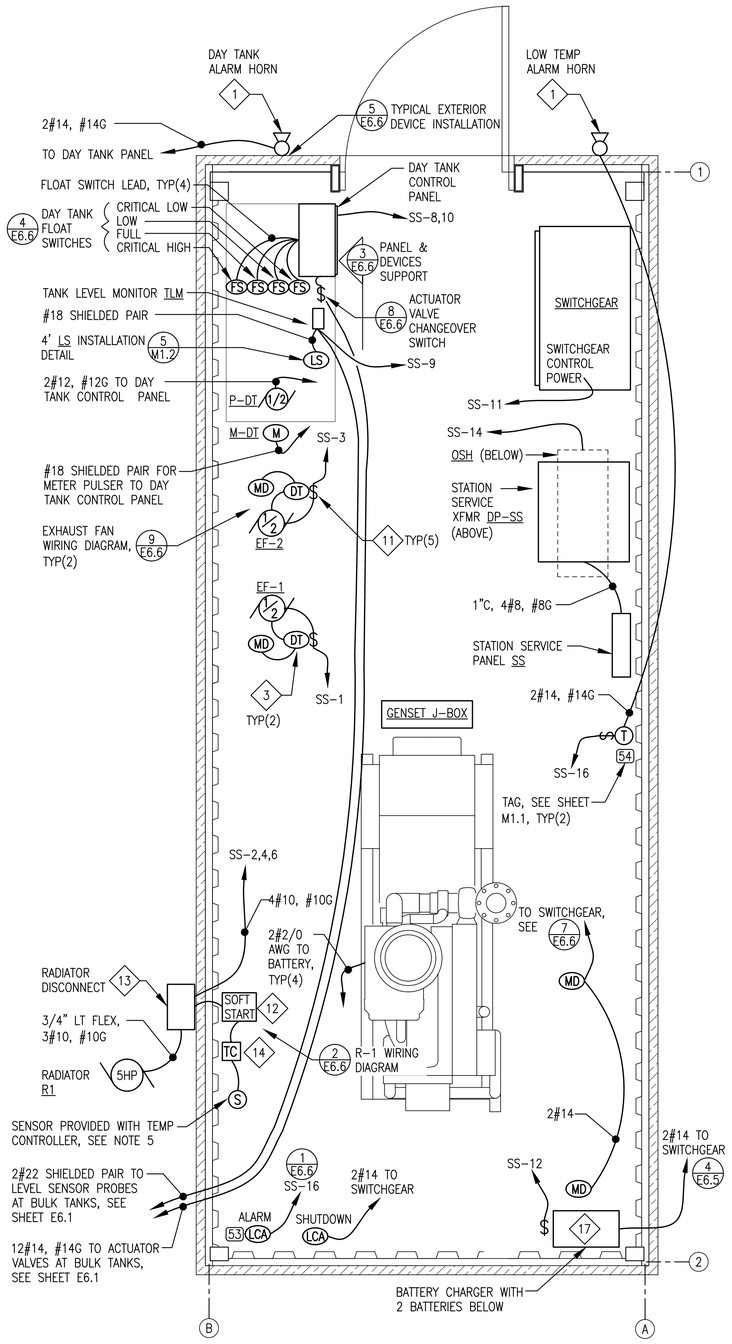

1 E6.5 STATION SERVICE PLAN
3/4"=1'-0"

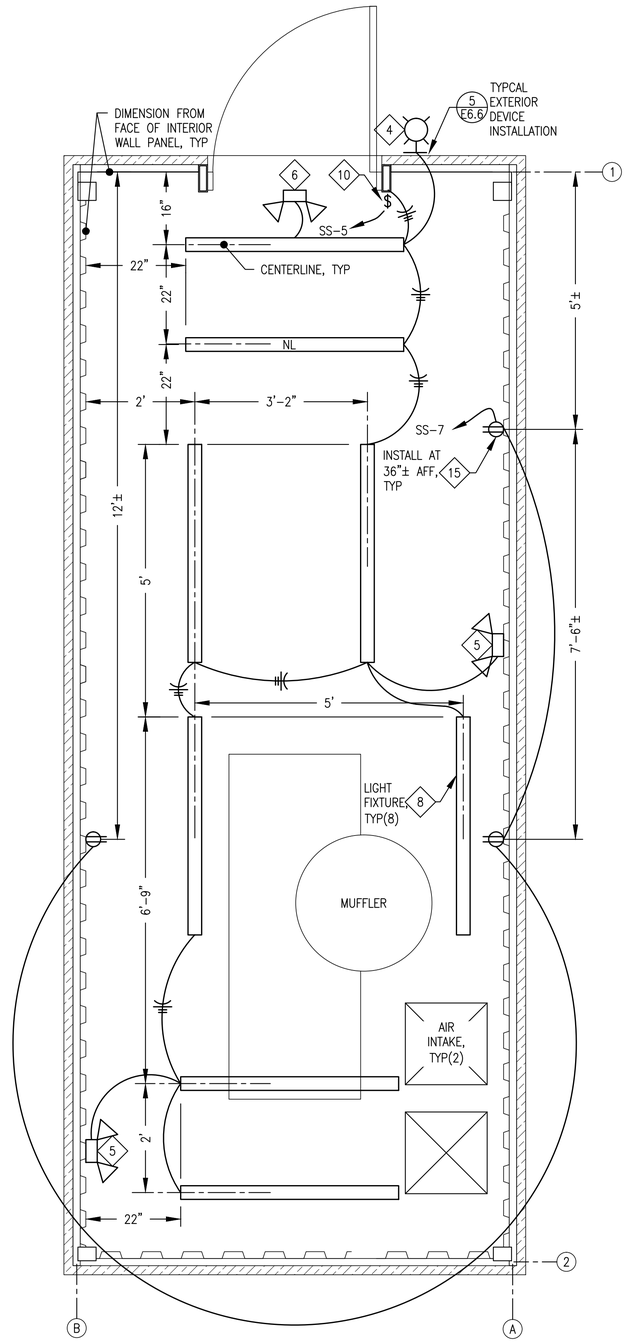

2 E6.5 LIGHTING/RECEPTACLE PLAN
3/4"=1'-0"

GENERAL NOTES:

1) ALL WIRING RUNS 2#12, #12G UNLESS SPECIFICALLY NOTED OTHERWISE.
2) SEE SWITCHGEAR SHOP DRAWINGS FOR TERMINATION OF ALL POWER AND CONTROL WIRING.
3) DAY TANK CONTROL PANEL FURNISHED BY AVEC. SEE AVEC PANEL SHOP DRAWINGS FOR TERMINATION OF FIELD WIRING.
4) INSTALL PILOT LIGHT DISCONNECT SWITCH FOR AVEC DATA/COMM RACK. INSTALLATION OF RACK & FINAL POWER CONNECTION TO BE PERFORMED BY AVEC.
5) SEE MECHANICAL FOR SENSOR LOCATION. ROUTE #18 SHIELDED PAIR TO CONTROLLER.

LIGHTING INSTALLATION NOTES:

1) ALL LIGHTING PLAN DIMENSIONS ARE APPROXIMATE. MOVE LIGHT TO CLOSEST CEILING-MOUNTED STRUT OR FLAT CORRUGATION SECTION.
2) ALL WIRING RUNS 2#12, #12G UNLESS SPECIFICALLY NOTED OTHERWISE.
3) FASTEN TO CEILING WITH #12 SHEET METAL SCREWS.
4) CONNECT NIGHT LIGHT (NL) TO UNSWITCHED LEG.

NOTE:
ALL WORK ON THIS SHEET SHALL BE ADDITIVE ALTERNATE B.

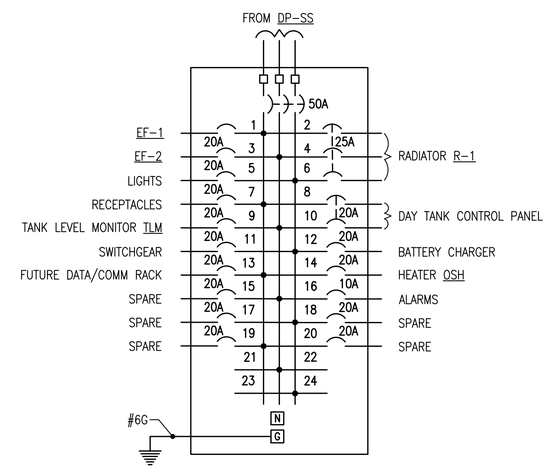

3 E6.5 STATION SERVICE PANEL "SS"
NO SCALE

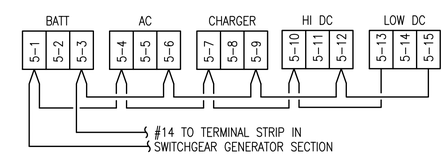

NOTE: PRIOR TO ENERGIZING MAKE THE FOLLOWING SETTINGS ON CHARGER:
1) AC LINE VOLTAGE SWITCH TO "115V".
2) AUTO BOOST JUMPER TO "NORM".
3) FLOAT VOLTAGE JUMPER TO "13.50/27.00" (FOR GEL CELL).
4) BATTERY RANGE JUMPER TO "24V".

4 E6.5 BATTERY CHARGER ALARM WIRING DIAGRAM
NO SCALE

ALASKA ENERGY AUTHORITY

STATE OF ALASKA 49TH CLOS W. VERSYP EE 7862 REGISTERED PROFESSIONAL ENGINEER

CRM ENGINEERING GROUP LLC PHONE: (907) 562-3252

Gray Stassel Engineering, Inc. PHONE: (907) 346-0100

TWIN HILLS, ALASKA
TWIN HILLS RPSU PROJECT

STANDBY MODULE
STATION SERVICE PLANS

NO.	REVISION	BY	DATE
0	ISSUED FOR CONSTRUCTION	CWV	1/26/18

Plot Date 1/26/18
Designed CWV/BCG
Drawn JTD
Approved CWV

Sheet No. E6.5

NOTES:

1) ALL WIRING #10AWG EXCEPT AS NOTED.

2) PLACE TEMPERATURE CONTROLLER IN COOLING/CUT-IN MODE. SETPOINT = 200°F, DIFFERENTIAL = 10°F

NOTE: SEE ATTACHED AVEC DAY TANK CONTROL PANEL REFERENCE DRAWINGS FOR WIRING TERMINATIONS.

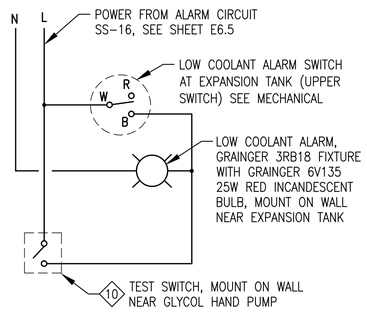

1 E6.6 LOW COOLANT ALARM WIRING DIAGRAM
NO SCALE

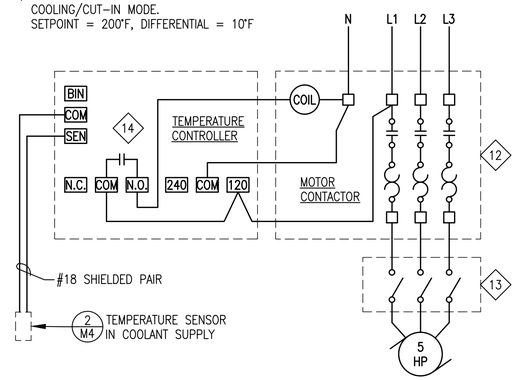

2 E6.6 RADIATOR R-1 WIRING DIAGRAM
NO SCALE

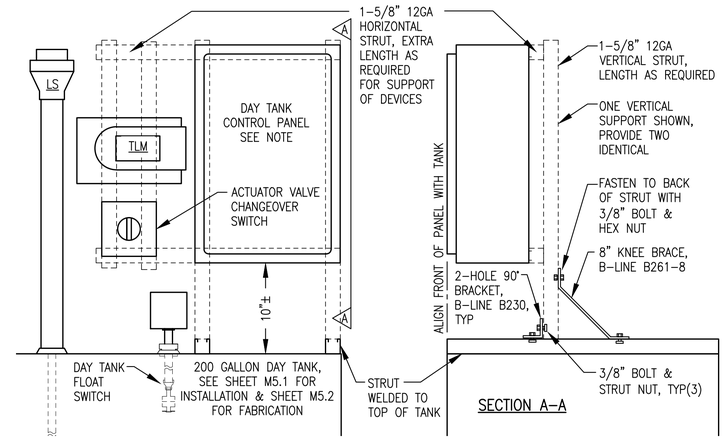

3 E6.6 DAY TANK CONTROL PANEL & DEVICES SUPPORT DETAIL
NO SCALE

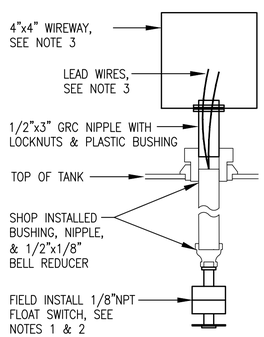

NOTES:

1) PRIOR TO INSTALLATION CHASE THREADS ON FLOAT SWITCH WITH 1/8" PIPE DIE TO CLEAN OFF ANY EXCESS EPOXY, USE CARE TO AVOID DAMAGING WIRES.

2) VERIFY FLOAT SWITCH ACTUATION PRIOR TO INSTALLATION: LOW AND CRITICAL LOW NORMALLY CLOSED (OPEN ON RISE) HIGH AND CRITICAL HIGH NORMALLY OPEN (CLOSE ON RISE). INVERT FLOAT TO CHANGE ACTUATION.

3) INSTALL CONTINUOUS WIREWAY OVER ALL 4 FLOAT SWITCHES. ROUTE LEAD WIRES TO DAY TANK CONTROL PANEL.

4 E6.6 FLOAT SWITCH INSTALLATION
NO SCALE

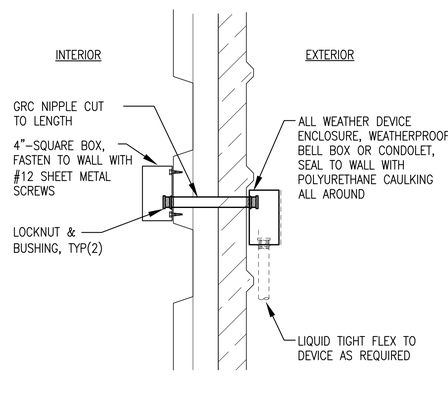

5 E6.6 TYP EXTERIOR WALL-MOUNT DEVICE INSTALLATION
NO SCALE

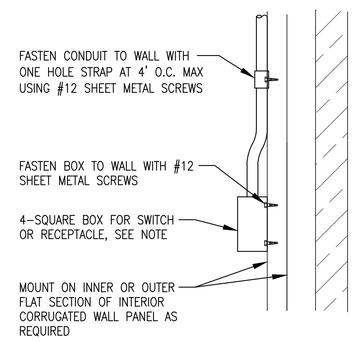

NOTE: INSTALL THERMOSTATS IN DEEP SINGLE GANG BELL BOX INSTEAD OF 4-SQUARE BOX.

6 E6.6 TYPICAL INTERIOR DEVICE MOUNTING
NO SCALE

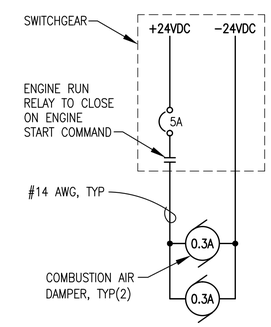

7 E6.6 COMBUSTION AIR DAMPER WIRING DIAGRAM
NO SCALE

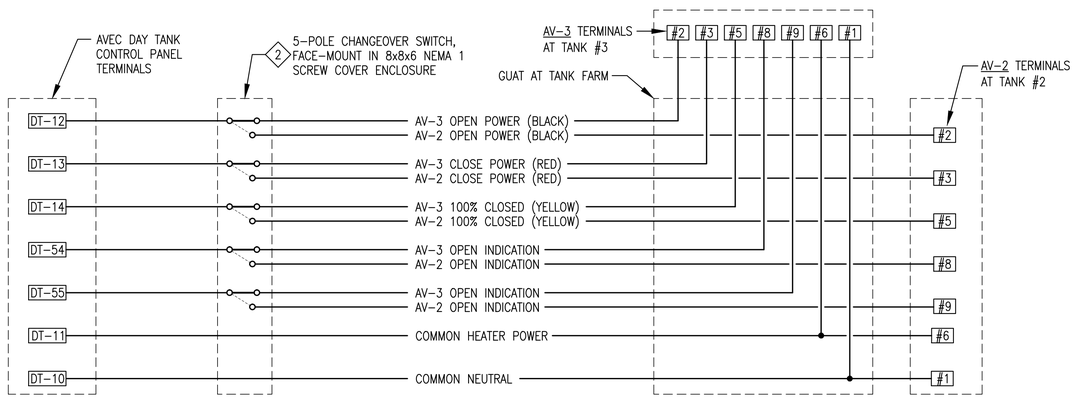

8 E6.6 ACTUATOR VALVE CHANGEOVER SWITCH WIRING DIAGRAM
NO SCALE

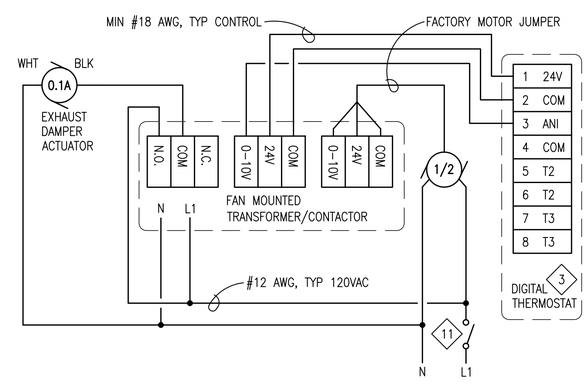

MAKE THE FOLLOWING SETTINGS ON DIGITAL THERMOSTAT:
APPLICATION = 0 (INTERNAL);
OUTPUT 1 = 0 (COOL/0-10V);
OUTPUT 2 = 0 (NOT USED);
OUTPUT 3 = 0 (NOT USED);
OUTPUT 3 ACTIV. = 0 (100%);
NSB VALUE = 3 (6°F);
OUTPUT 1 MIN = 0 (0%);
MAX SETPOINT = 90°F;
MIN SETPOINT = 50°F

NOTE:
ALL WORK ON THIS SHEET SHALL BE ADDITIVE ALTERNATE B.

9 E6.6 EXHAUST FAN WIRING DIAGRAM
NO SCALE

ALASKA ENERGY AUTHORITY

STATE OF ALASKA 49TH REGISTERED PROFESSIONAL ENGINEER CLOIS W. VERSYP EE 7862

CRM ENGINEERING GROUP LLC PHONE: (907) 562-3252

Gray Stassel Engineering, Inc. PHONE: (907) 349-0100

TWIN HILLS, ALASKA
TWIN HILLS RPSU PROJECT

STANDBY MODULE
ELECTRICAL DETAILS

NO.	REVISION	BY	DATE
0	ISSUED FOR CONSTRUCTION	CWV	1/26/18

Plot Date 1/26/18
Designed CWV/BCG
Drawn JTD
Approved CWV

Sheet No. E6.6

NOTE:
ALL WORK ON THIS SHEET SHALL BE ADDITIVE ALTERNATE B.

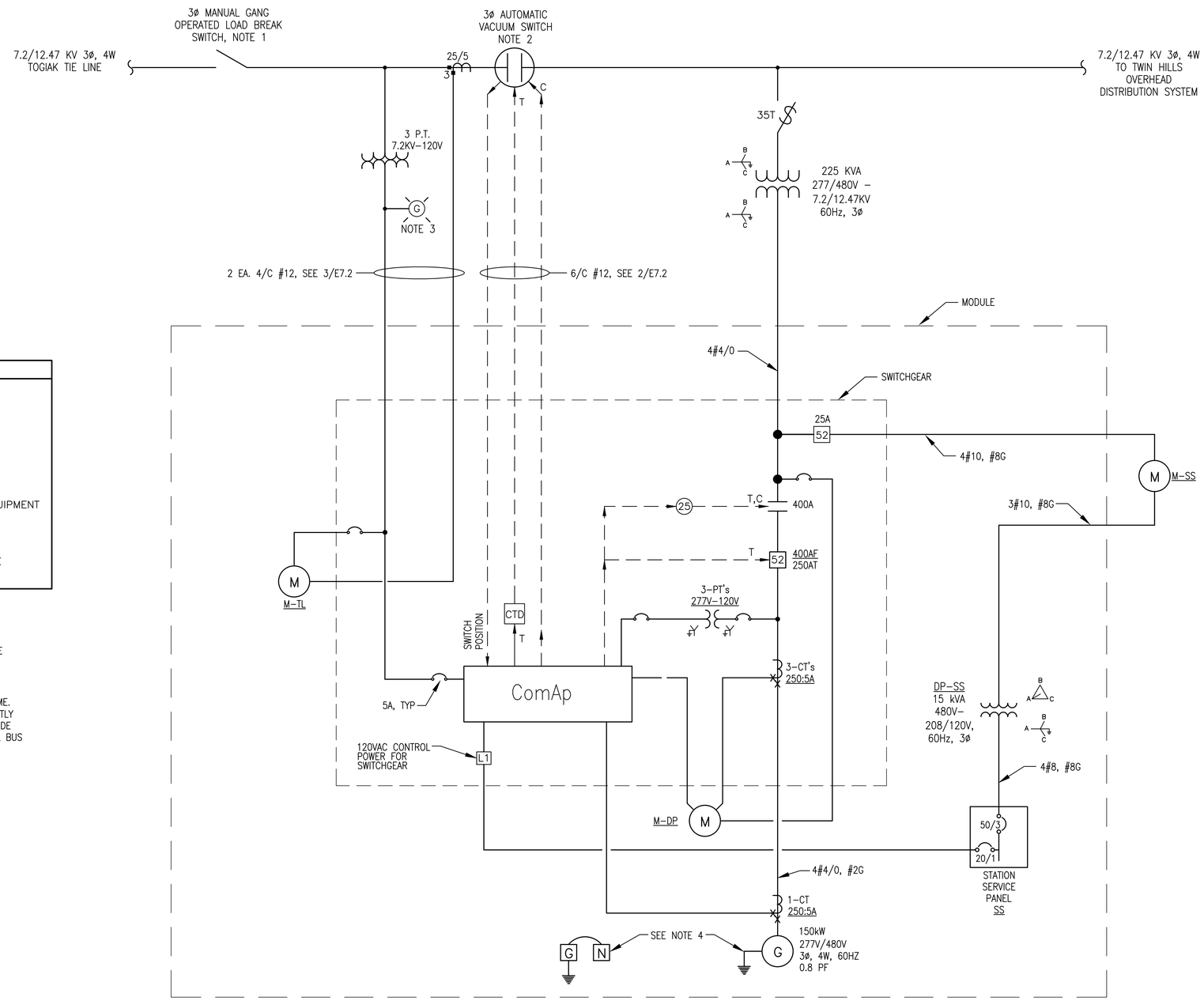

SWITCHGEAR SYMBOL LEGEND

- (G) DIESEL GENERATOR
- [52] 80AT 250AF — CIRCUIT BREAKER AT=AMP TRIP RATING AF=AMP FRAME RATING
- 250A — CONTACTOR WITH AMPERE RATING
- CURRENT TRANSFORMER M.R. – INDICATES MULTIRATIO CT'S RATING FACTOR RF=2.0
- POTENTIAL TRANSFORMER
- WYE CONNECTION
- DELTA CONNECTION
- (M-TL) METER – TIE LINE TOTAL POWER
- (M-DP) METER – DIESEL POWER GENERATED
- (M-SS) METER – STATION SERVICE POWER
- (25) SYNCHRONIZING EQUIPMENT
- T – TRIP (OPEN)
- C – CLOSE
- CTD – CAPACITIVE TRIP DEVICE

NOTES:

1) PROVIDE 15KV, 3ø, HORIZONTAL, GANG OPERATED LOAD–BREAK SWITCH. SEE SPECIFICATIONS.
2) THREE–PHASE POLE MOUNTED VACUUM SWITCH. SEE SPECIFICATIONS.
3) GREEN LED LIGHT TO INDICATE WHEN TOGIAK POWER IS AVAILABLE.
4) ISOLATE THE GENERATOR NEUTRAL FROM MOUNTING SKID & GENERATOR FRAME. CONNECT NEUTRAL TO THE NEUTRAL BUS AT THE SWITCHGEAR. INDEPENDENTLY GROUND THE GENERATOR FRAME TO THE SWITCHGEAR GROUND BUS & PROVIDE SECOND GROUND DIRECTLY TO MODULE FLOOR. BOND SWITCHGEAR NEUTRAL BUS TO THE SWITCHGEAR GROUND BUS.

1 / E7.1 STANDBY MODULE ONE–LINE DIAGRAM
NO SCALE

ALASKA ENERGY AUTHORITY

STATE OF ALASKA 49TH REGISTERED PROFESSIONAL ENGINEER CLOIS W. VERSYP EE 7802

CRM ENGINEERING GROUP LLC PHONE: (907) 562-3252

Gray Stassel Engineering, Inc. PHONE: (907) 346-0100

TWIN HILLS, ALASKA
TWIN HILLS RPSU PROJECT

STANDBY MODULE ONE–LINE DIAGRAM

NO.	REVISION	BY	DATE
0	ISSUED FOR CONSTRUCTION	CWV	1/26/18

Plot Date 1/26/18
Designed CWV/BCG
Drawn JTD
Approved CWV

Sheet No. E7.1

NOTE:
ALL WORK ON THIS SHEET SHALL BE ADDITIVE ALTERNATE B.

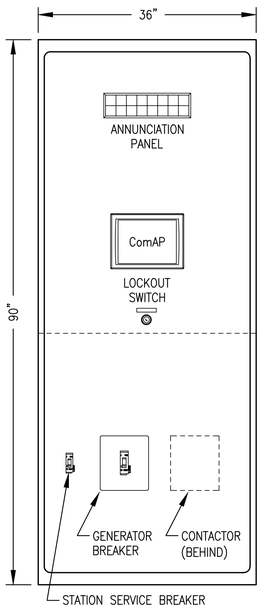

FRONT ELEVATION

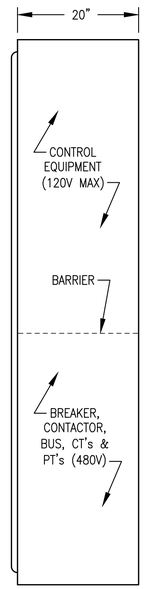

TYPICAL CROSS SECTION

1 E7.2 SWITCHGEAR ENCLOSURE LAYOUT
NO SCALE

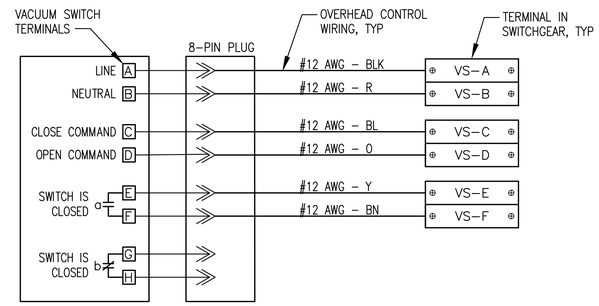

2 E7.2 VACUUM SWITCH CONTROL WIRING
NO SCALE

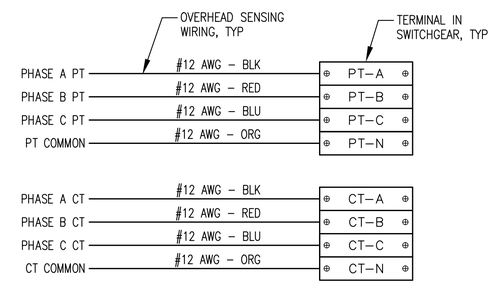

3 E7.2 TOGIAK TIELINE POTENTIAL & CURRENT SENSING
NO SCALE

ALASKA ENERGY AUTHORITY

STATE OF ALASKA 49TH CLOS W. VERSYP EE 7802 REGISTERED PROFESSIONAL ENGINEER

CRM ENGINEERING GROUP LLC PHONE: (907) 562-3252

Gray Stassel Engineering, Inc. PHONE: (907) 349-0100

TWIN HILLS, ALASKA

TWIN HILLS RPSU PROJECT

STANDBY MODULE
SWITCHGEAR LAYOUT & DETAILS

NO.	REVISION	BY	DATE
0	ISSUED FOR CONSTRUCTION	CWV	1/26/18

Plot Date 1/26/18
Designed CWV/BCG
Drawn JTD
Approved CWV

Sheet No.
E7.2

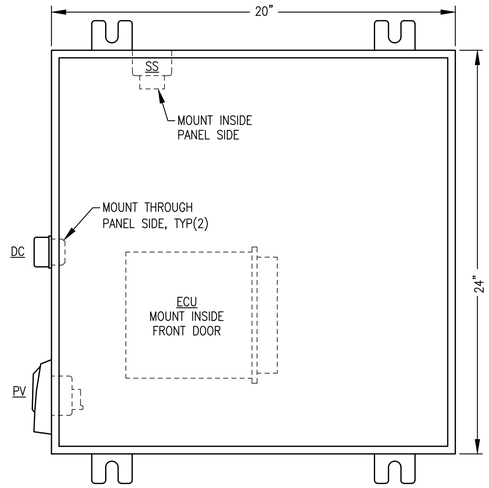

1 E7.3 JUNCTION BOX FRONT PANEL LAYOUT
NO SCALE

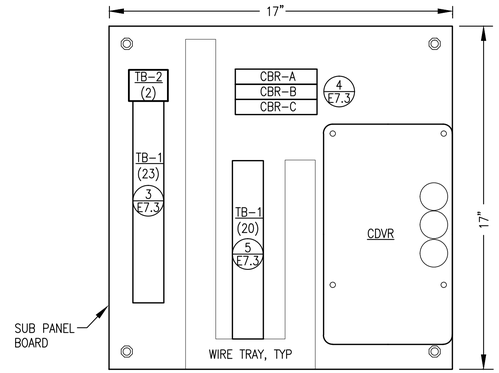

2 E7.3 JUNCTION BOX SUB PANEL LAYOUT
NO SCALE

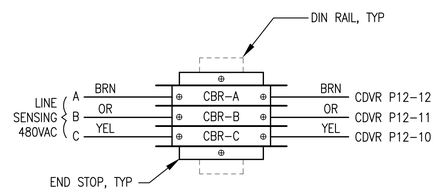

4 E7.3 CIRCUIT BREAKER CONNECTIONS
NO SCALE

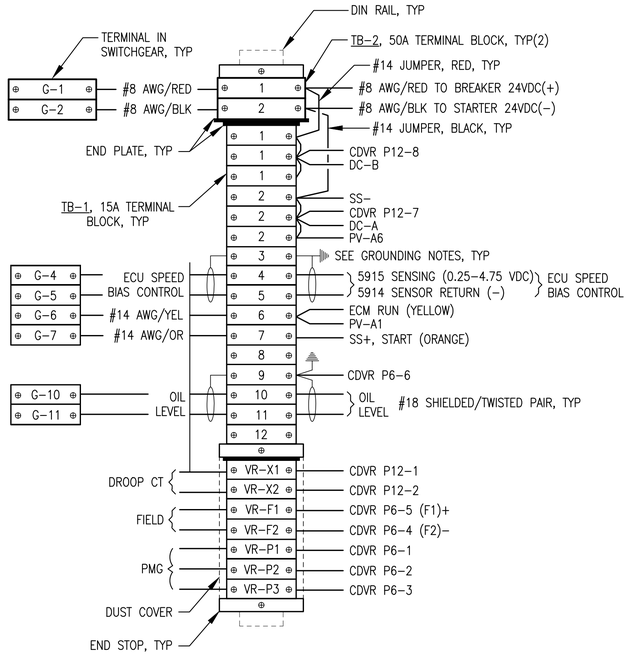

3 E7.3 TERMINAL STRIP CONNECTIONS
NO SCALE

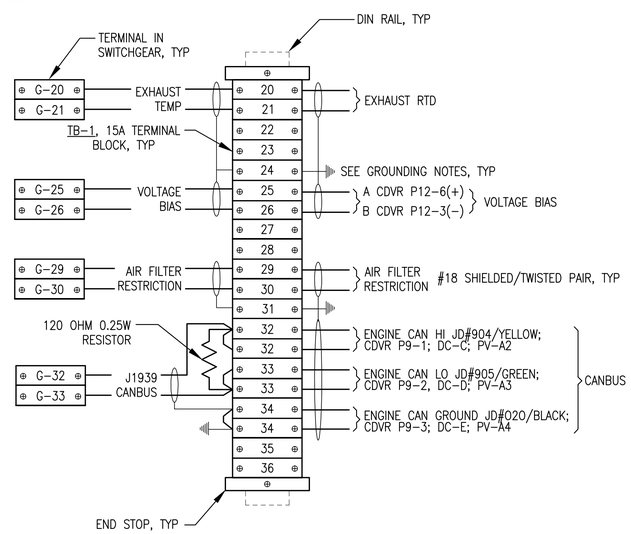

5 E7.3 TERMINAL STRIP CONNECTIONS
NO SCALE

JUNCTION BOX BILL OF MATERIALS

NOTE: PROVIDE MANUFACTURER & MODEL INDICATED UNLESS SPECIFICALLY NOTED "OR EQUAL".

TAG	MANUFACTURER	MODEL	DESCRIPTION
ENCLOSURE	HOFFMAN	A20H20ALP	20x20x8" NEMA 12
	HOFFMAN	A20P20	BACK PANEL
CDVR	CATERPILLAR	314-7755	DIGITAL VOLTAGE REGULATOR, PROVIDE WITH HARNESS
CBR	ALLEN-BRADLEY	1489-A1-C010	RAIL MOUNT CIRCUIT BREAKER, 1-POLE, 1A
DC	DEUTSCH	HD10-9-96-S-1939	DIAGNOSTIC CONNECTOR, 9-PIN, CAN-BUS
	DEUTSCH	HD18-009	CONNECTOR STRAIN RELIEF
	DEUTSCH	HDC16-9	CONNECTOR PROTECTIVE DUST CAP
	DEUTSCH	HD10-9-GKT	CONNECTOR GASKET
	DEUTSCH	JDL062397	CONNECTOR LANYARD
PV	MURPHY	PV-101A/PVW-PW30	POWER VIEW W/HARNESS
SS	CATERPILLAR	9X-8124	STARTER SOLENOID
TB-1	IDEC	BNH15LW	15A DIN RAIL-MOUNT TERMINAL BLOCK
TB-2	IDEC	BNH50W	50A DIN RAIL-MOUNT TERMINAL BLOCK

SWITCHGEAR COORDINATION NOTES:

1) IN SWITCHGEAR PROVIDE TERMINALS FOR CONNECTION OF ALL HOME RUNS AS INDICATED.

2) LABEL TERMINALS IN SWITCHGEAR EXACTLY AS INDICATED HERE (E.G. G-20, G-21).

JUNCTION BOX SHOP FABRICATION NOTES:

1) PROVIDE ASSEMBLY WITH ALL DEVICES AND WIRING INDICATED.

2) INSTALL IN A 20"Hx20"Wx12"D NEMA 12 ENCLOSURE WITH MOUNTING FLANGES AT BACK, A MIN 14 GAUGE INTERIOR BACK PANEL AND HINGED LOCKABLE DOOR.

3) PROVIDE DIN RAIL, TERMINAL END PLATES, TERMINAL END STOPS, TERMINAL DUST COVERS AND OTHER MISCELLANEOUS HARDWARE AS REQUIRED TO MATCH TERMINALS. LABEL ALL TERMINALS EXACTLY AS INDICATED ON THE DETAILS.

4) ALL WIRE #14AWG EXCEPT WHERE SPECIFICALLY INDICATED OTHERWISE. TAG EACH END OF ALL JUMPERS WITH DEVICE OR TERMINATION DESIGNATOR OF LANDING OF OPPOSITE END OF JUMPER (REVERSE ADDRESS).

5) PROVIDE MECHANICAL GROUND LUGS FASTENED TO BACK PANEL AND GROUNDED TO ENGINE-GENERATOR. GROUND ALL SHIELD DRAIN WIRES TO LUGS AT ONE END ONLY.

6) PROVIDE WIRING HARNESSES FOR CONNECTION TO GENERATOR AND TO ENGINE. INSTALL WIRES IN FLEXIBLE PLASTIC WIRE LOOM AND PROVIDE SERVICE LOOPS IN ACCORDANCE WITH SPECIFICATIONS.

7) SHOP TEST EACH ENGINE-GENERATOR WITH ASSOCIATED JUNCTION BOX PERMANENTLY CONNECTED. UPON COMPLETION OF TESTING, COIL WIRING HARNESSES AND SECURE JUNCTION BOX TO GENERATOR FOR SHIPPING.

JUNCTION BOX FIELD INSTALLATION NOTES:

1) PERFORM ALL FIELD WIRING IN ACCORDANCE WITH SPECIFICATIONS ON SHEET E2. LABEL BOTH ENDS OF ALL FIELD WIRING WITH THE NUMBER OF THE ASSOCIATED HOME RUN LANDING ON TERMINAL IN THE CONTROL PANEL.

2) ON SHIELDED CONDUCTORS FROM SWITCHGEAR GROUND ALL SHIELD DRAIN WIRES TO LUGS AT GENERATOR END ONLY.

NOTE:
ALL WORK ON THIS SHEET SHALL BE ADDITIVE ALTERNATE B.

ALASKA ENERGY AUTHORITY

STATE OF ALASKA 49TH REGISTERED PROFESSIONAL ENGINEER CLOIS W. VERSYP EE 7862

CRM ENGINEERING GROUP LLC PHONE: (907) 562-3252

Gray Stassel Engineering, Inc. PHONE: (907) 346-0100

TWIN HILLS, ALASKA
TWIN HILLS RPSU PROJECT

STANDBY MODULE
ENGINE PANEL LAYOUT & DETAILS

NO.	REVISION	BY	DATE
0	ISSUED FOR CONSTRUCTION	CWV	1/26/18

Plot Date 1/26/18
Designed CWV/BCG
Drawn JTD
Approved CWV

Sheet No. E7.3

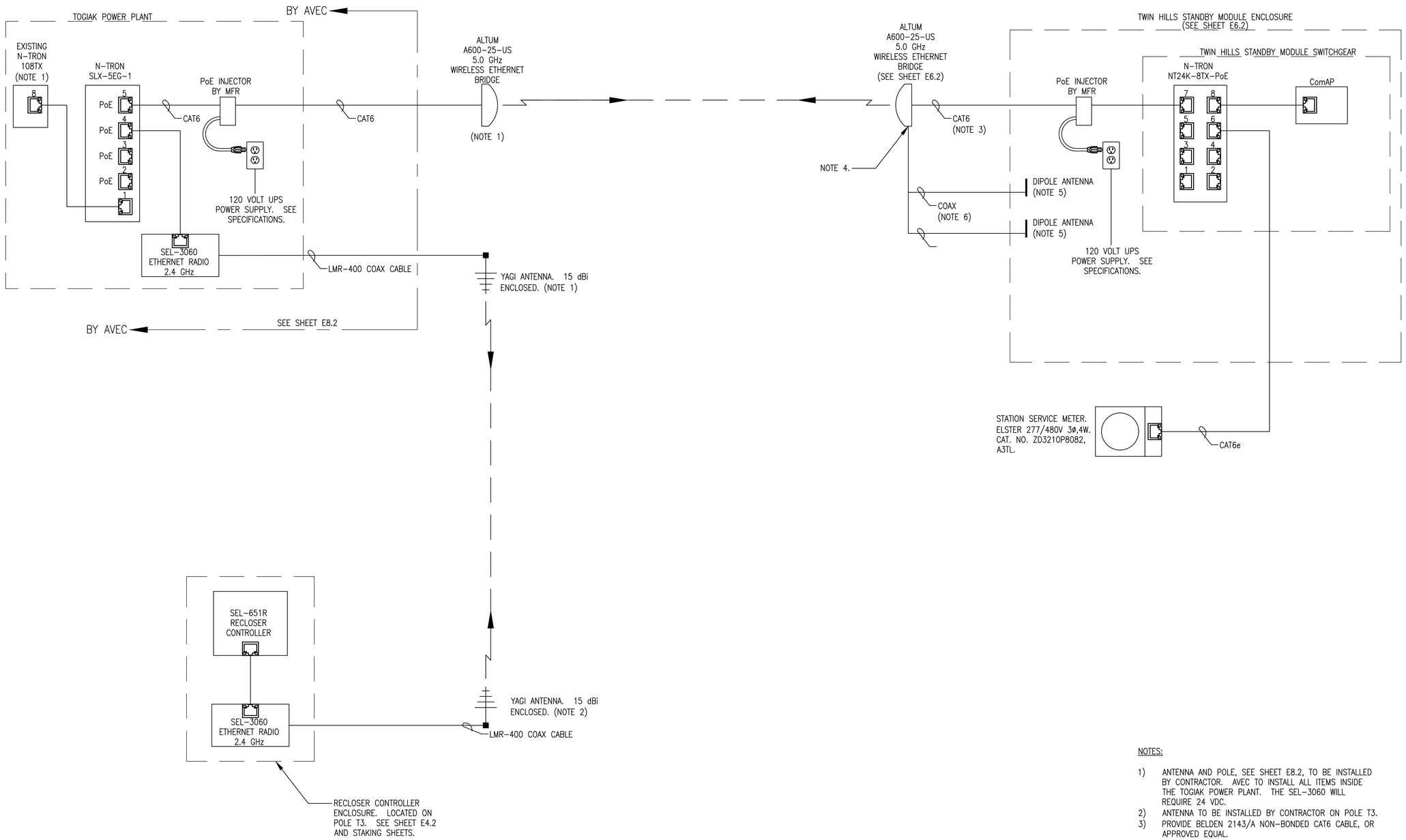

NOTES:

1) ANTENNA AND POLE, SEE SHEET E8.2, TO BE INSTALLED BY CONTRACTOR. AVEC TO INSTALL ALL ITEMS INSIDE THE TOGIAK POWER PLANT. THE SEL-3060 WILL REQUIRE 24 VDC.
2) ANTENNA TO BE INSTALLED BY CONTRACTOR ON POLE T3.
3) PROVIDE BELDEN 2143/A NON-BONDED CAT6 CABLE, OR APPROVED EQUAL.
4) CONNECT WI-FI CABLES TO 2.4 GHz CONNECTIONS IN ACCORDANCE WITH THE MANUFACTURES INSTRUCTIONS AND RECOMMENDATIONS.
5) PROVIDE 2.4 GHz OMNI DIRECTION ANTENNA FOR WI-FI IN ACCORDANCE WITH THE MANUFACTURES INSTRUCTIONS AND RECOMMENDATIONS.
6) PROVIDE COAX CABLE IN ACCORDANCE WITH THE MANUFACTURES INSTRUCTIONS AND RECOMMENDATIONS.

NOTE:
ALL WORK ON THIS SHEET SHALL BE ADDITIVE ALTERNATE B.

ALASKA ENERGY AUTHORITY

STATE OF ALASKA 49TH CLOIS W. VERSIP EE 7862 REGISTERED PROFESSIONAL ENGINEER

CRW ENGINEERING GROUP LLC PHONE: (907) 562-3252

Gray Stassel Engineering, Inc. PHONE: (907) 349-0100

TWIN HILLS, ALASKA
TWIN HILLS RPSU PROJECT

TWIN HILLS TO TOGIAK COMMUNICATION RISER DIAGRAM

NO.	REVISION	BY	DATE
0	ISSUED FOR CONSTRUCTION	CWV	1/26/18

Plot Date 1/26/18
Designed CWV/BCG
Drawn CWV/BCG
Approved CWV

Sheet No. E8.1

NOTE:
ALL WORK ON THIS SHEET SHALL BE ADDITIVE ALTERNATE B.

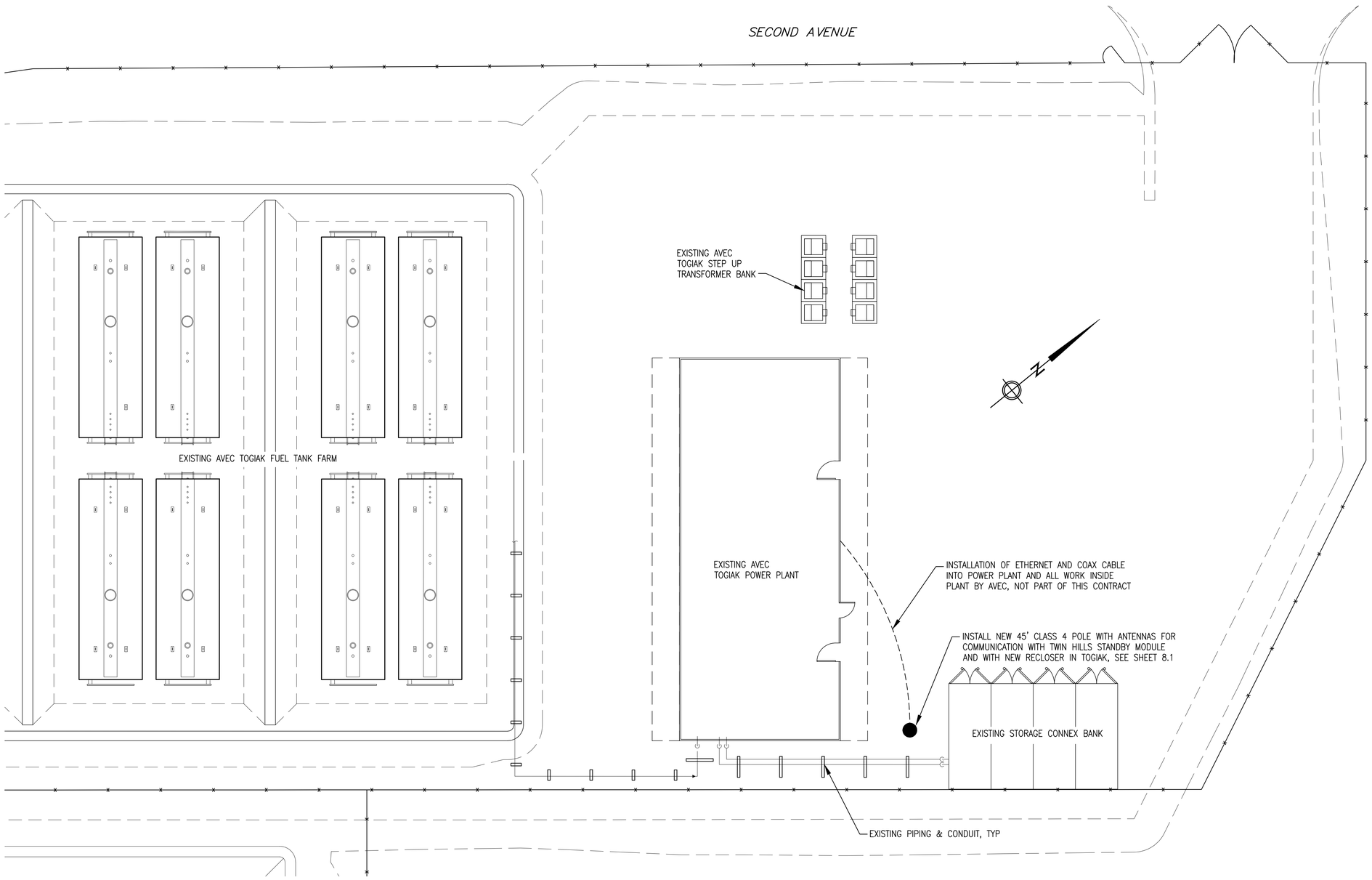

1 / E8.2 TOGIAK AVEC POWER PLANT SITE PLAN
1"=10'

ALASKA ENERGY AUTHORITY

STATE OF ALASKA 49TH REGISTERED PROFESSIONAL ENGINEER CLOIS W. VERSYP EE 7802

CRW ENGINEERING GROUP LLC PHONE: (907) 562-3252

Gray Stassel Engineering, Inc. PHONE: (907) 349-0100

TWIN HILLS, ALASKA
TWIN HILLS RPSU PROJECT

TWIN HILLS TO TOGIAK COMMUNICATION
TOGIAK POWER PLANT SITE PLAN

NO.	REVISION	BY	DATE
0	ISSUED FOR CONSTRUCTION.	CWV	1/26/18

Plot Date 1/26/18
Designed CWV/BCG
Drawn CWV/BCG
Approved CWV

Sheet No. E8.2

GENERAL NOTES

1. THE CONTRACTOR SHALL PROTECT ALL ITEMS NOT SCHEDULED FOR DEMOLITION DURING CONSTRUCTION. DISTURBED AREAS SHALL BE RESTORED TO PRE–CONSTRUCTION CONDITION.

2. ALL EXISTING UTILITIES MAY NOT BE SHOWN ON THESE PLANS. THE CONTRACTOR SHALL CONSULT WITH THE APPROPRIATE UTILITY ORGANIZATIONS TO VERIFY AND LOCATE UTILITIES PRIOR TO CONSTRUCTION. SEE "CALL BEFORE YOU DIG" CONTACT INFORMATION ON THIS SHEET.

3. IT IS THE RESPONSIBILITY OF THE CONTRACTOR TO DETERMINE APPROPRIATE TEMPORARY CUT SLOPES AND SHORING FOR EXCAVATIONS AND TRENCHES FOR SITE SOILS, GROUNDWATER AND RUNOFF CONDITIONS AND SURFACE LOADING CONDITIONS. THE CONTRACTOR MUST COMPLY WITH APPLICABLE FEDERAL AND STATE OSHA REGULATIONS. THE CONTRACTOR SHALL MAINTAIN ALL SIGNS, BARRICADES, WARNING LIGHTS AND OTHER PROTECTIVE DEVICES NECESSARY FOR SAFETY AND TRAFFIC CONTROL.

4. THE CONTRACTOR SHALL BE RESPONSIBLE FOR COORDINATING HIS WORK WITH EXISTING FACILITY OPERATORS, OTHER CONTRACTORS, SUBCONTRACTORS, THE CITY AND STATE AND FEDERAL AUTHORITIES.

5. THE DRAWINGS ARE DIAGRAMMATIC AND DO NOT NECESSARILY SHOW ALL FEATURES OF THE REQUIRED WORK. PROVIDE ALL LABOR, EQUIPMENT AND MATERIALS REQUIRED FOR A COMPLETE, AND CODE COMPLIANT SYSTEM. VERIFY EXISTING FIELD CONDITIONS PRIOR TO STARTING CONSTRUCTION. IMMEDIATELY CONTACT THE ENGINEER FOR CLARIFICATION OF QUESTIONABLE ITEMS OR APPARENT CONFLICTS.

6. ALL ITEMS TO BE INSTALLED ARE NEW UNLESS SPECIFICALLY INDICATED AS EXISTING. INSTALL ALL MATERIALS AND EQUIPMENT IAW MANUFACTURER'S RECOMMENDATIONS, INSTRUCTIONS, AND INSTALLATION DRAWINGS, UNLESS OTHERWISE INDICATED ON THE DRAWINGS.

7. THE SPECIFICATION OF A NAME BRAND PRODUCT FOLLOWED BY THE "OR EQUAL" PHRASE IS DONE MERELY TO ESTABLISH THE MINIMUM LEVEL OF QUALITY OF MATERIALS AND EQUIPMENT REQUIRED AND IS NOT A PRODUCT ENDORSEMENT. SUBMIT ANY PROPOSED SUBSTITUTIONS FOR REVIEW AND APPROVAL, UNLESS "NO SUBSTITUTIONS" IS SPECIFIED.

8. FACILITY DESIGN IS IAW THE 2012 INTERNATIONAL FIRE CODE, STATE OF ALASKA FIRE AND SAFETY REGULATIONS ADMINISTRATIVE CODES 13 AAC 50, 13 AAC 55, AND THE MEMORANDUM OF AGREEMENT BETWEEN THE AEA AND THE STATE OF ALASKA FIRE MARSHALL AT THE TIME OF DESIGN.

9. CONTRACTOR TO PROVIDE SIGNAGE IAW THE SIGN SCHEDULE, AND AS IDENTIFIED ELSEWHERE IN THE DRAWINGS.

10. PERFORM WORK WITH SKILLED CRAFTSMEN SPECIALIZED IN SAID WORK. INSTALL ALL MATERIALS IN A NEAT, ORDERLY, AND SECURE FASHION, AS REQUIRED BY THE DRAWINGS AND SPECIFICATIONS AND STANDARDS OF GOOD WORKMANSHIP.

11. WHERE PIPE SUPPORTS ARE NOT SHOWN THEY SHALL BE SPACED A MAXIMUM OF 10 FEET ON CENTER IAW THE 2012 UPC.

12. SCHEDULE AND COORDINATE DEMOLITION AND NEW CONSTRUCTION ACTIVITIES SUCH THAT COMPLETE AND OPERABLE COMMUNITY POWER GENERATION AND BULK FUEL STORAGE SYSTEMS ARE MAINTAINED AT ALL TIMES FOR ALL PROJECT PARTICIPANTS.

13. CONTRACTOR SHALL MAINTAIN A "RECORD" SET OF DRAWINGS TO REFLECT FIELD CHANGES THROUGHOUT CONSTRUCTION. RECORD CONSTRUCTION DRAWINGS SHALL BE SUBMITTED TO ENGINEER AT COMPLETION OF THE PROJECT.

14. ALL WORK SHALL BE PERFORMED IAW U.S. ENVIRONMENTAL PROTECTION AGENCY, ALASKA DEPARTMENT OF ENVIRONMENTAL CONSERVATION, AND STATE AND FEDERAL OCCUPATIONAL HEALTH AND SAFETY REGULATIONS.

15. IF ANY ARCHAEOLOGICAL, CULTURAL OR PALEONTOLOGY RESOURCES ARE DISCOVERED AS A RESULT OF CONSTRUCTION ACTIVITIES, CONTRACTOR'S SHALL STOP ALL WORK THAT WOULD DISTURB SUCH RESOURCES AND CONTACT THE ENGINEER AND THE STATE OFFICE OF HISTORY AND ARCHEOLOGY (907–269–8721).

ABBREVIATIONS

ADEC	ALASKA DEPARTMENT OF ENVIRONMENTAL CONSERVATION
AEA	ALASKA ENERGY AUTHORITY
ADOT	ALASKA DEPARTMENT OF TRANSPORTATION
ALCA	ALUMINUM SURVEY CAP
ANSI	AMERICAN NATIONAL STANDARDS INSTITUTE
API	AMERICAN PETROLEUM INSTITUTE
APPROX	APPROXIMATE
ASTM	AMERICAN SOCIETY FOR TESTING OF MATERIALS
AST	ABOVEGROUND STORAGE TANK
AWS	AMERICAN WELDING SOCIETY
AVEC	ALASKA VILLAGE ELECTRIC COOPERATIVE
BLDG	BUILDING
CMP	CORRUGATED METAL PIPE
CP	CONTROL PANEL
DEMO	DEMOLISH
DFT	DRY FILM THICKNESS
DIA	DIAMETER
DWG	DRAWING
E	EAST
EA	EACH
EL	ELEVATION
ELEC	ELECTRIC
EPA	U.S. ENVIRONMENTAL PROTECTION AGENCY
ENGINEER	CRW ENGINEERING GROUP, LLC
E–VENT	EMERGENCY VENT
°F	FAHRENHEIT
FBE	FUSION BONDED EPOXY
FF	FINISH FLOOR ELEV.
FG	FINISH GRADE
FOR	FUEL OIL RETURN
FOS	FUEL OIL SUPPLY
FPT	FEMALE NATIONAL PIPE TAPERED THREAD
FT	FOOT OR FEET
GA	GAUGE
GAL	GALLON
GALV	GALVANIZED
GPM	GALLONS PER MINUTE
HDPE	HIGH DENSITY POLYETHYLENE
HP	HORSE POWER
HR	HOUR
IAW	IN ACCORDANCE WITH
IBC	INTERNATIONAL BUILDING CODE
ID	INSIDE DIAMETER
IFC	INTERNATIONAL FIRE CODE
IPC	INTERNATIONAL PLUMBING CODE
LF	LINEAR FEET
LB	POUND
M	METERS
MAX	MAXIMUM
MIL	0.001 INCH
MIN	MINIMUM
MPT	MALE NATIONAL PIPE TAPERED THREAD
N	NORTH
NC	NORMALLY CLOSED
NFS	NON FROST SUSCEPTIBLE (SOIL)
NIC	NOT IN CONTRACT
NO	NORMALLY OPEN
NPT	NATIONAL PIPE TAPERED THREAD
NTS	NOT TO SCALE
OAE	OR APPROVED EQUAL
OD	OUTSIDE DIAMETER
OSHA	OCCUPATIONAL SAFETY AND HEALTH ADMINISTRATION
OZ	OUNCE
PL	PLATE
PRV	PRESSURE RELIEF VALVE
PSF	POUNDS PER SQUARE FOOT
PSI	POUNDS PER SQUARE INCH
R	RADIUS
RF	RAISED FACE
S	SEWER
SCH	SCHEDULE
SHPO	STATE HISTORIC PRESERVATION OFFICER
SIM	SIMILAR
SPEC	SPECIFICATION
SQ	SQUARE
SS	STAINLESS STEEL
SSPC	STEEL STRUCTURES PAINTING COUNCIL
SY	SQUARE YARD
TBM	TEMPORARY BENCH MARK
TYP	TYPICAL
UG	UNDER GROUND
UL	UNDERWRITERS LABORATORY
UPC	UNIFORM PLUMBING CODE
W/	WITH
W	WATER

CIVIL LEGEND (GENERAL)

NOTE: SOME DETAILS UTILIZE SYMBOLS NOT IN THIS GENERAL LEGEND. WHERE THIS OCCURS, SYMBOLS ARE DEFINED ON THE SHEET ON WHICH THEY ARE USED.

- PROPERTY BOUNDARY
- CULVERT
- EDGE OF WATER
- DITCH LINE/DRAINAGE SWALE
- 2% — DRAINAGE DIRECTION & SLOPE
- TRAVELED WAY
- FILL SLOPE
- CUT SLOPE
- FENCE LINE
- FIRE EXTINGUISHER
- 20 — GROUND ELEVATION CONTOURS
- BOLLARD
- POWER POLE
- 9 — INFORMATION / WARNING SIGN
- 5 — SHEET NOTE
- SURVEY MONUMENT
- XXX — FINISH GRADE ELEVATION
- DIAMETER
- BALL VALVE
- MOTOR ACTUATED BALL VALVE
- CHECK VALVE
- PRESSURE RELIEF VALVE w/ FLOW DIRECTION
- P — PRESSURE TEST TAP
- FLEXIBLE CONNECTOR
- WYE STRAINER (MESH SIZE)
- QUICK COUPLING
- VERTICAL PIPE TRANSITION
- REDUCER
- LEVEL FLOAT SWITCH

UTILITY LINE/PIPELINE DESIGNATIONS

F	FUEL
D	DIESEL FUEL
G	GASOLINE
HR	RECOVERY
S	SANITARY SEWER
W	WATER

- UNDERGROUND UTILITY LINE/PIPELINE: EXISTING
- UNDERGROUND UTILITY LINE/PIPELINE: PROPOSED
- ABOVEGROUND UTILITY LINE/PIPELINE: EXISTING
- ABOVEGROUND UTILITY LINE/PIPELINE: PROPOSED
- UTILITY LINE/PIPELINE TO BE DECOMMISSIONED

CALL BEFORE YOU DIG	
WATER/SEWER	
ELECTRIC	

DETAIL/SECTION REFERENCES

DETAIL SYMBOL

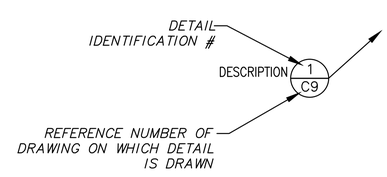

SECTION SYMBOL

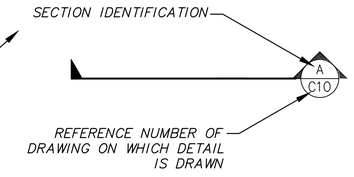

State of Alaska
Department of Commerce, Community and Economic Development
AIDEA/AEA
Rural Energy Group
813 West Northern Lights Blvd.
Anchorage, Alaska 99503
ALASKA ENERGY AUTHORITY

STATE OF ALASKA
49TH
KARL R. HULSE
CE 10583
8/27/2018
REGISTERED PROFESSIONAL ENGINEER

Gray Stassel Engineering, Inc.
P.O. 111405, Anchorage, AK 99511 (907)349-0100

CRW ENGINEERING GROUP, LLC
3940 ARCTIC BLVD. SUITE 300
ANCHORAGE, ALASKA 99503
PHONE: (907) 562–3252
#AECL882–AK

TWIN HILLS, ALASKA
RURAL POWER SYSTEM UPGRADE
CIVIL NOTES, LEGEND, & ABBREVIATIONS

NO.	REVISION	BY	DATE
0	ISSUED FOR CONSTRUCTION	TRK	8/2018

Plot Date 10/2/18
Designed KRH
Drawn AJG
Approved KRH

Sheet No. C1.1

File: J:\JobsData\30404.09 Twin Hills RPSU\00 CADD\01 Working Set\01 Civil\30404.09 Civil Notes, Legend & Abbreviations.dwg

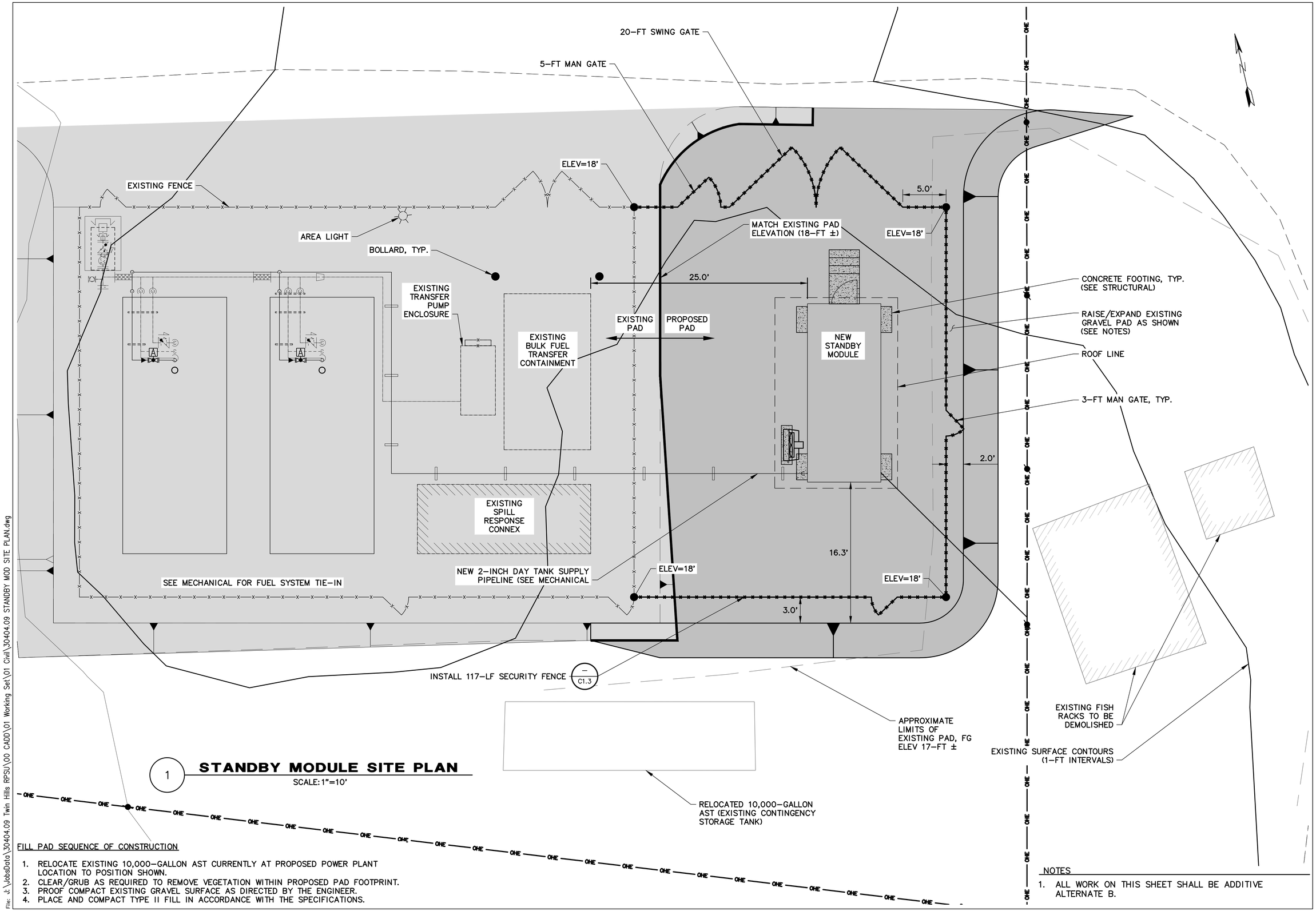

1 **STANDBY MODULE SITE PLAN**

SCALE: 1"=10'

FILL PAD SEQUENCE OF CONSTRUCTION

1. RELOCATE EXISTING 10,000-GALLON AST CURRENTLY AT PROPOSED POWER PLANT LOCATION TO POSITION SHOWN.
2. CLEAR/GRUB AS REQUIRED TO REMOVE VEGETATION WITHIN PROPOSED PAD FOOTPRINT.
3. PROOF COMPACT EXISTING GRAVEL SURFACE AS DIRECTED BY THE ENGINEER.
4. PLACE AND COMPACT TYPE II FILL IN ACCORDANCE WITH THE SPECIFICATIONS.

NOTES

1. ALL WORK ON THIS SHEET SHALL BE ADDITIVE ALTERNATE B.

File: J:\JobData\30404.09 Twin Hills RPSU\00 CADD\01 Working Set\01 Civil\30404.09 STANDBY MOD SITE PLAN.dwg

State of Alaska
Department of Commerce, Community and Economic Development
AIDEA/AEA
Rural Energy Group
813 West Northern Lights Blvd.
Anchorage, Alaska 99503
ALASKA ENERGY AUTHORITY

STATE OF ALASKA 49TH KARL R. HULSE CE 10583 10/2/2018 REGISTERED PROFESSIONAL ENGINEER

Gray Stassel Engineering, Inc.
P.O. 111405, Anchorage, AK 99511 (907)349-0100

CRW ENGINEERING GROUP, LLC
3940 ARCTIC BLVD. SUITE 300
ANCHORAGE, ALASKA 99503
PHONE: (907) 562-3252
#AECL882-AK

TWIN HILLS, ALASKA
RURAL POWER SYSTEM UPGRADE
CIVIL STANDBY MODULE SITE PLAN

NO.	REVISION	BY	DATE
0	ISSUED FOR CONSTRUCTION	TRK	8/2018

Plot Date 10/2/18
Designed KRH
Drawn AJG
Approved KRH

Sheet No. C1.2

NOTES

1. ALL WORK ON THIS SHEET SHALL BE ADDITIVE ALTERNATE B.

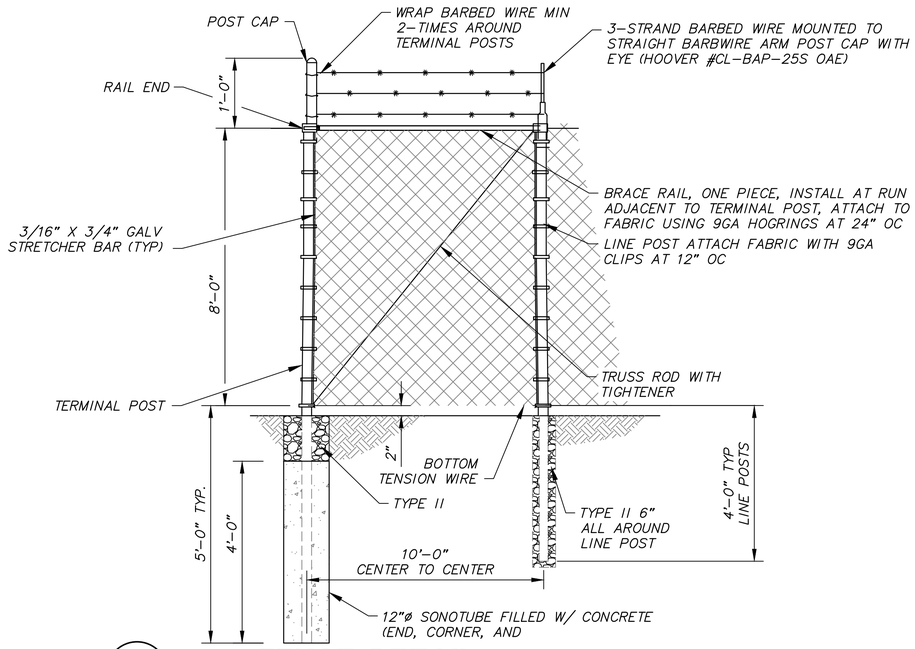

1 **FENCE DETAIL**

SCALE: NTS

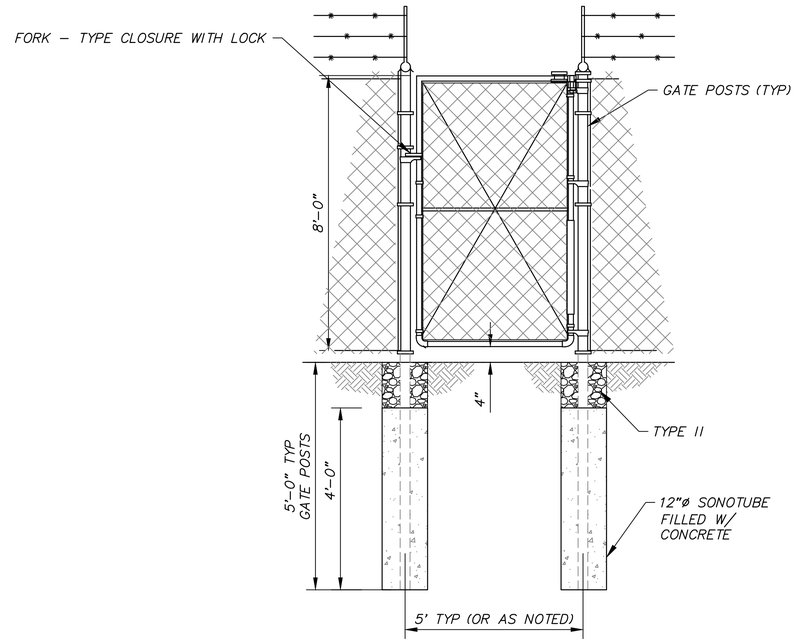

2 **MAN GATE DETAIL**

SCALE: NTS

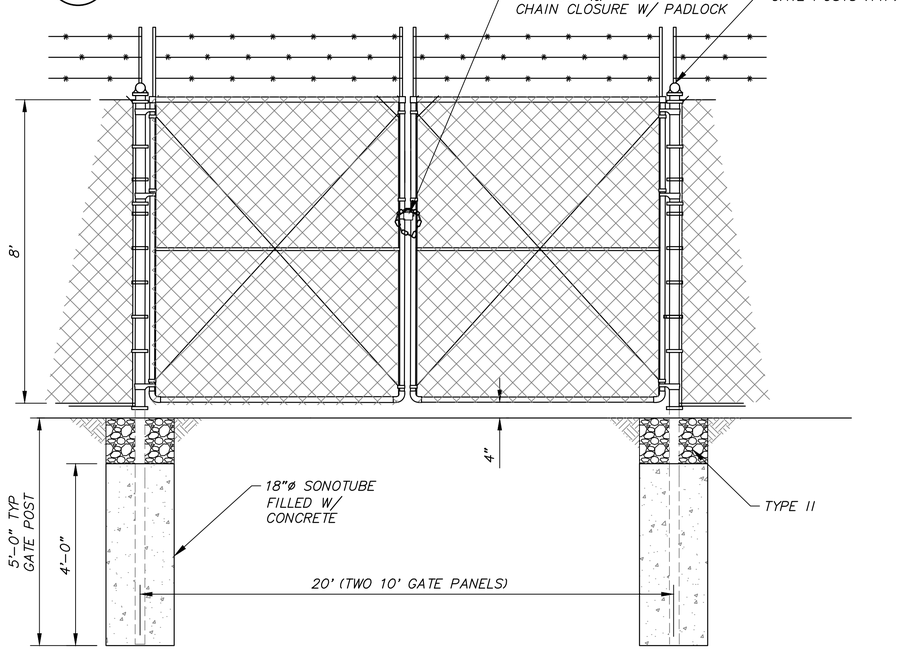

3 **DOUBLE SWING GATE DETAIL**

SCALE: NTS

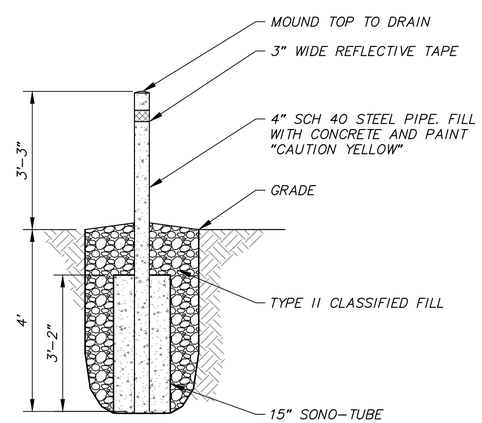

4 **BOLLARD DETAIL**

SCALE: NTS

State of Alaska
Department of Commerce, Community and Economic Development
AIDEA/AEA
Rural Energy Group
813 West Northern Lights Blvd.
Anchorage, Alaska 99503

ALASKA ENERGY AUTHORITY

STATE OF ALASKA
49TH
KARL R. HULSE
CE 10583
10/2/2018
REGISTERED PROFESSIONAL ENGINEER

Gray Stassel Engineering, Inc.
P.O. 111405, Anchorage, AK 99511 (907)349-0100

CRW ENGINEERING GROUP, LLC
3940 ARCTIC BLVD. SUITE 300
ANCHORAGE, ALASKA 99503
PHONE: (907) 562-3252
#AECL882-AK

TWIN HILLS, ALASKA
RURAL POWER SYSTEM UPGRADE
FENCE & BOLLARD DETAILS

NO.	REVISION	BY	DATE
0	ISSUED FOR CONSTRUCTION	TRK	8/2018

Plot Date 10/2/18
Designed KRH
Drawn AJG
Approved KRH

Sheet No. C1.3

File: J:\JobsData\30404.09 Twin Hills RPSU\00 CADD\01 Working Set\01 Civil\30404.09 Fence & Bollard Details.dwg

STRUCTURAL GENERAL NOTES – MODULE:

1.0 DESIGN LOADS:

A. BUILDING CODE: 2012 INTERNATIONAL BUILDING CODE (IBC 2009)

B. FLOOR LIVE LOADS: (IBC TABLE 1607.1)
LIGHT STORAGE/MANUFACTURING 125 PSF OR 2000 POUND POINT LOAD
MAXIMUM GENERATOR UNIT WEIGHT 5,000 POUNDS

C. SNOW LOADS: (ASCE 7–10)
GROUND SNOW LOAD, Pg = 70 PSF
COEFFICIENT OF EXPOSURE, Ce = 1.0 , PARTIALLY EXPOSED
SNOW IMPORTANCE FACTOR, Is = 1.2 , CATEGORY IV
THERMAL COEFFICIENT, Ct = 1.2 , COLD, VENTILATED ROOF

D. WIND LOADS:
BASIC WIND SPEED = 150 MPH, 3 SECOND GUST
WIND IMPORTANCE FACTOR, Iw = 1.15 , CATEGORY IV
EXPOSURE CLASSIFICATION = EXPOSURE D

E. SEISMIC LOADING:
SEISMIC = S_s = 0.20 S_1 = 0.05
SEISMIC IMPORTANCE FACTOR = 1.50 , CATEGORY IV

SITE CLASS "D"
BASIC SEISMIC FORCE RESISTANCE SYSTEM:
BUILDING – BEARING WALL WITH STEEL SHEAR PANELS
FOUNDATION – SPREAD CONCRETE FOOTINGS
SEISMIC RESPONSE COEFFICIENT, R = 7.0

NOTES

1. ALL WORK ON THIS SHEET SHALL BE ADDITIVE ALTERNATE B.

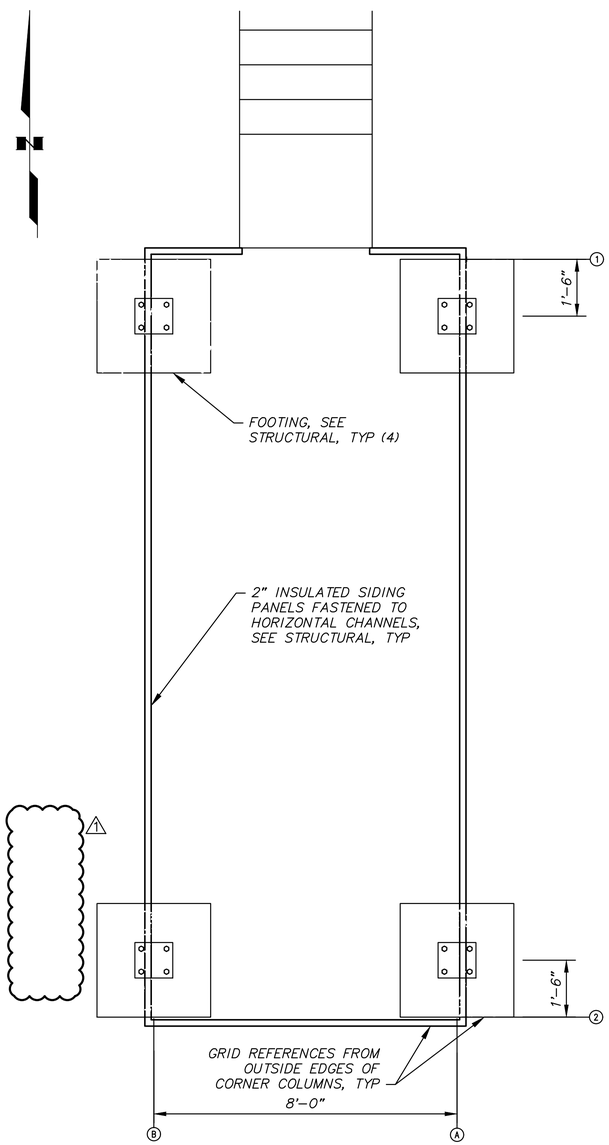

1 CONNEX FOUNDATION PLAN
SCALE: 1/2"=1'–0"

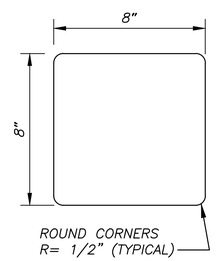

SHIM FABRICATION TABLE		
THICKNESS	QUANTITY	MATERIAL
1/4"	12	ALUMINUM
1/2"	8	ALUMINUM
1"	4	ALUMINUM

2 TYPICAL SHIM
SCALE: NTS

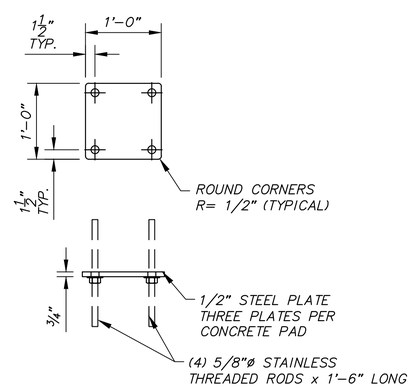

3 TYPICAL STEEL PLATE
SCALE: NTS

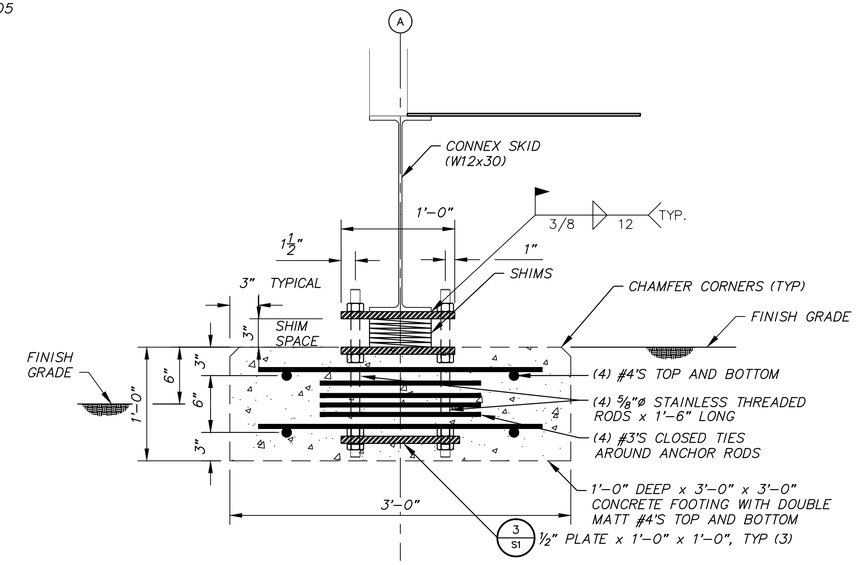

4 SECTION - FOOTING
SCALE: 1 1/2" = 1'–0"

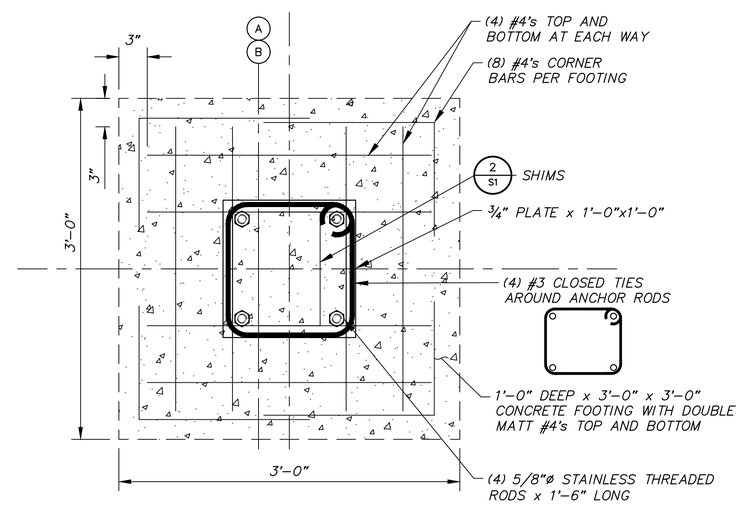

5 PLAN - FOOTING
SCALE: 1 1–2" = 1'–0"

File: J:\JobsData\30404.09 Twin Hills RPSU\00 CADD\01 Working Set\05 Structural\30404.09 Connex Foundation Plan.dwg

State of Alaska
Department of Commerce, Community and Economic Development
AIDEA/AEA
Rural Energy Group
813 West Northern Lights Blvd.
Anchorage, Alaska 99503
ALASKA ENERGY AUTHORITY

STATE OF ALASKA
AKRB
David G. Thompson
No. SE 14226
8/27/2018
REGISTERED PROFESSIONAL ENGINEER

Gray Stassel Engineering, Inc.
P.O. 111405, Anchorage, AK 99511 (907)349-0100

CRW ENGINEERING GROUP, LLC
3940 ARCTIC BLVD. SUITE 300
ANCHORAGE, ALASKA 99503
PHONE: (907) 562–3252
#AECL882–AK

TWIN HILLS, ALASKA
RURAL POWER SYSTEM UPGRADE
STANDBY MODULE FOUNDATION PLAN & DETAILS

NO.	REVISION	BY	DATE
0	ISSUED FOR CONSTRUCTION	TRK	8/2018
1	REVISED PER ADDENDA 1	TRK	10/2018

Plot Date 10/2/18
Designed BCG
Drawn KEB
Approved DGT

Sheet No. S1

CONNEX MODIFICATION GENERAL NOTES:

1. FURNISH LIKE NEW (ONE TRIP) ISO HIGH CUBE 20' LONG STEEL CONTAINER (CONNEX). SEE SPECIFICATIONS.
2. REMOVE DOORS, HINGES, HARDWARE, AND GASKETS. LEAVE HINGE FRAMES INTACT. CUT OFF DOOR LATCH CAM POCKETS. CUT OFF ALL INTERNAL LASHING RINGS. GRIND SMOOTH ALL AREAS WHERE ATTACHMENTS ARE REMOVED.
3. IF CORNER POCKETS PROTRUDE BELOW THE BOTTOM OF THE BOTTOM SIDE FRAMING, CUT OR GRIND FLUSH WITH BOTTOM OF SIDE RAIL.
4. IN ADDITION TO MODIFICATIONS SHOWN ON STRUCTURAL AND ARCHITECTURAL, SEE SHEET M2 FOR SUPPORTS AND WALL PENETRATIONS WELDED INTO CONNEX.

NOTES

1. ALL WORK ON THIS SHEET SHALL BE ADDITIVE ALTERNATE B.

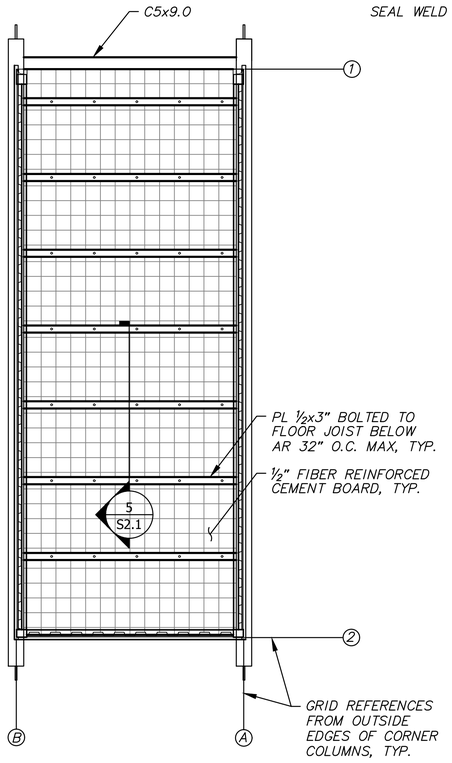

1 FLOOR INFILL PLAN
SCALE: 3/8"=1'-0"

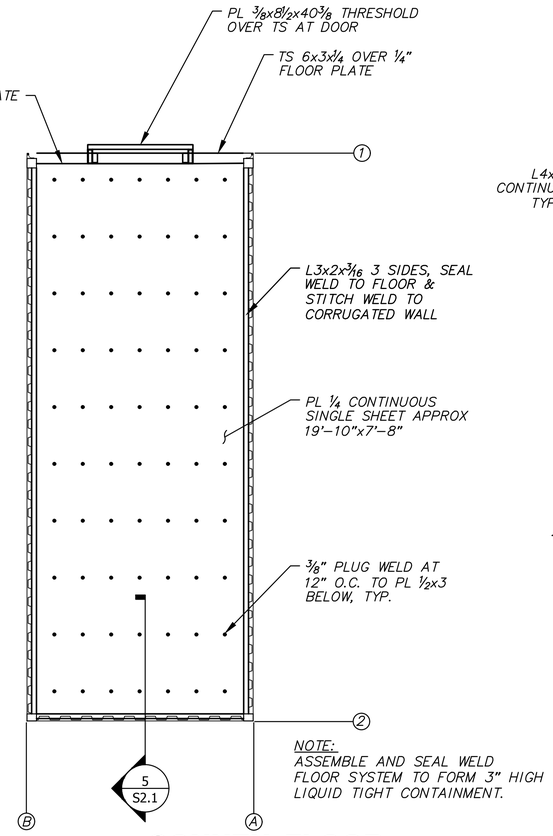

NOTE:
ASSEMBLE AND SEAL WELD FLOOR SYSTEM TO FORM 3" HIGH LIQUID TIGHT CONTAINMENT.

2 CONNEX FLOOR CONTAINMENT PLAN
SCALE: 3/8"=1'-0"

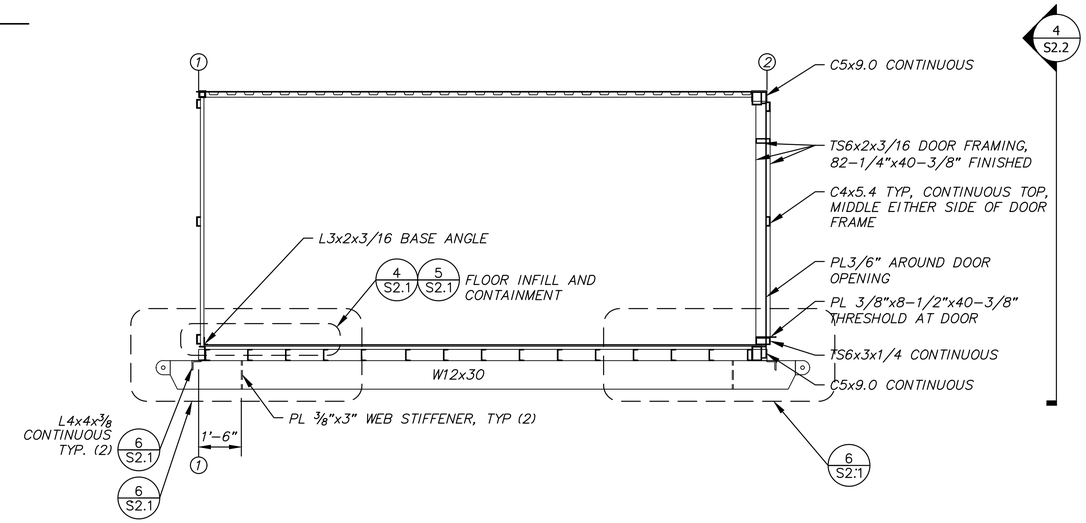

3 SECTION
SCALE: 3/8"=1'-0"

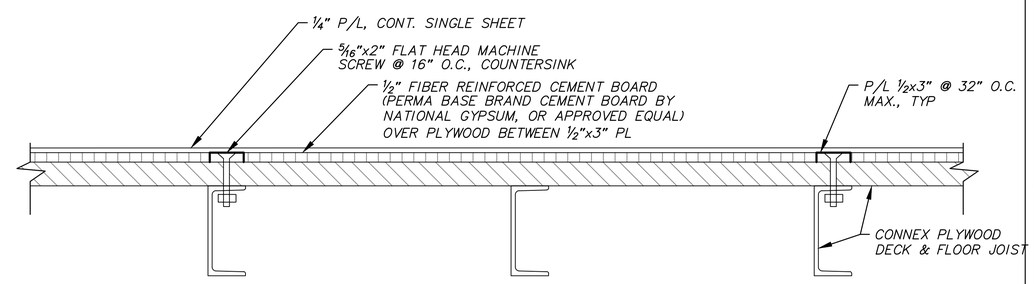

4 CONNEX FLOOR INFILL FOR PLATE INSTALLATION
SCALE: 3"=1'-0"

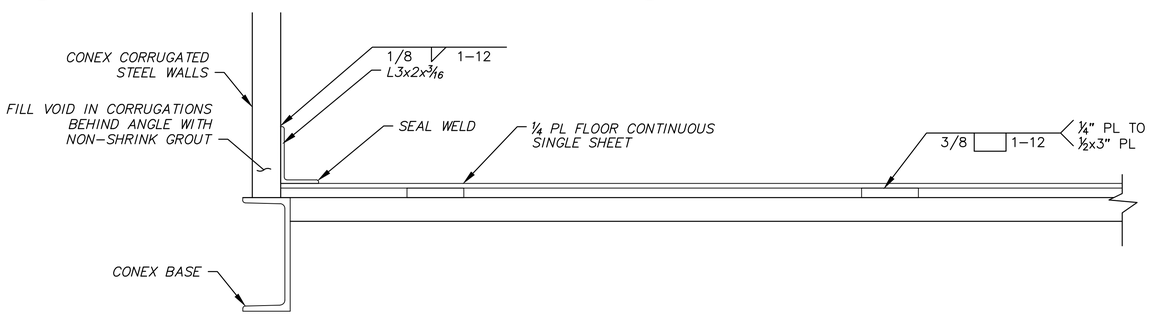

5 CONNEX CONTAINMENT FLOOR
SCALE: 3"=1'-0"

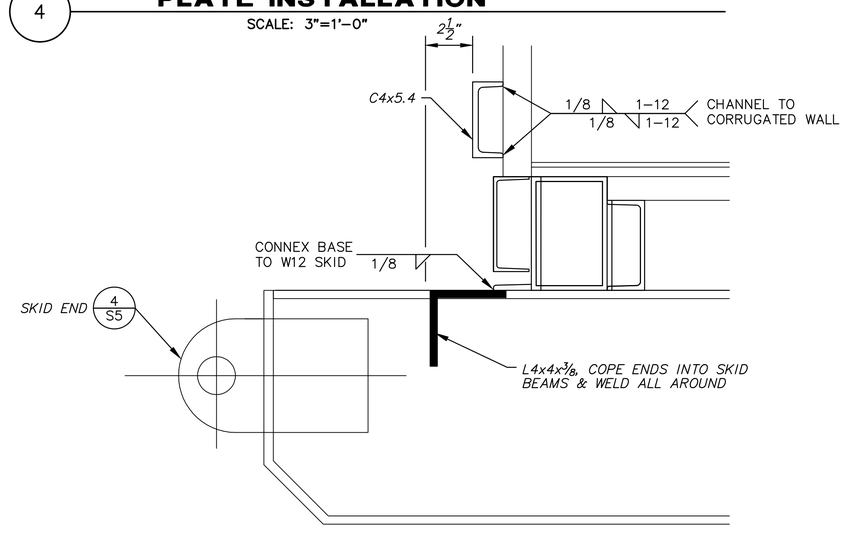

6 SKID BRACE AT ENDS
SCALE: 3"=1'-0"

State of Alaska
Department of Commerce, Community and Economic Development
AIDEA/AEA
Rural Energy Group
813 West Northern Lights Blvd.
Anchorage, Alaska 99503
ALASKA ENERGY AUTHORITY

STATE OF ALASKA
David G. Thompson
REGISTERED PROFESSIONAL ENGINEER
No. SE 14226
8/27/2018

Gray Stassel Engineering, Inc.
P.O. 111405, Anchorage, AK 99511 (907)349-0100

CRW ENGINEERING GROUP, LLC
3940 ARCTIC BLVD. SUITE 300
ANCHORAGE, ALASKA 99503
PHONE: (907) 562-3252
#AECL882-AK

TWIN HILLS, ALASKA
RURAL POWER SYSTEM UPGRADE
STANDBY MODULE CONNEX FLOOR PLANS, SECTIONS, & DETAILS

NO.	REVISION	BY	DATE
0	ISSUED FOR CONSTRUCTION	TRK	8/2018

Plot Date 10/2/18
Designed BCG
Drawn KEB
Approved DGT

Sheet No. S2.1

File: J:\JobsData\30404.09 Twin Hills RPSU\00 CADD\01 Working Set\05 Structural\30404.09 Connex Struc-Details.dwg

NOTES

1. ALL WORK ON THIS SHEET SHALL BE ADDITIVE ALTERNATE B.

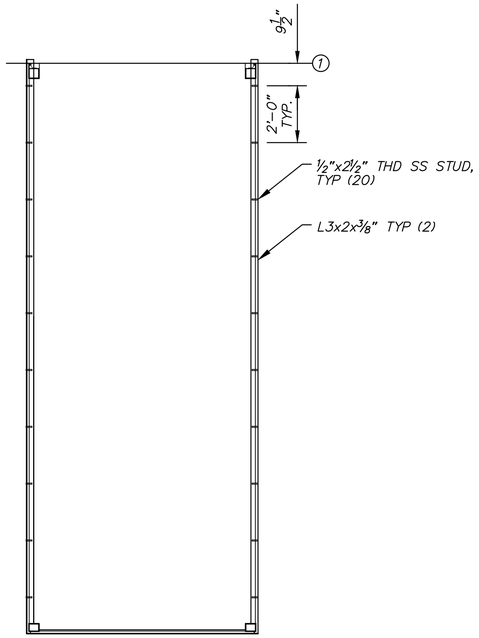

1 **CONNEX ROOF STUD PLAN**
SCALE: 3/8"=1'-0"

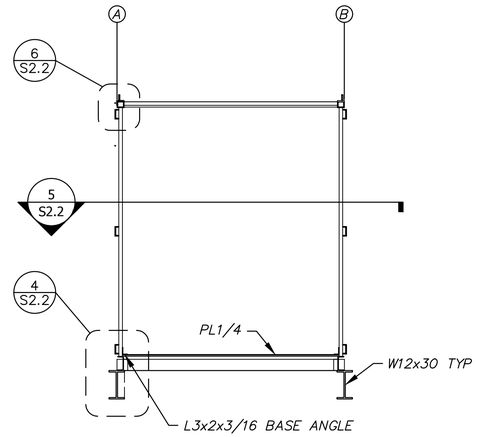

2 **CONNEX EXTERIOR FRAMING SECTION**
SCALE: 3/8"=1'-0"

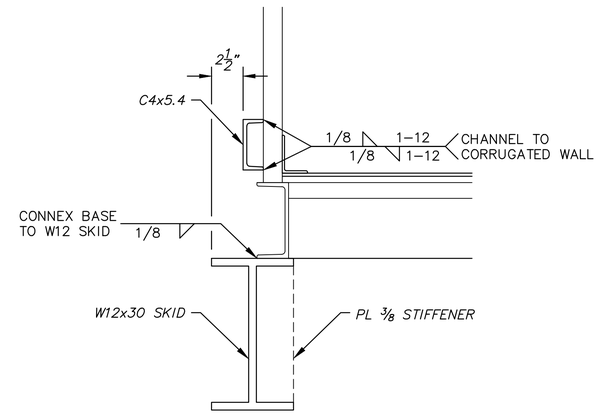

3 **CONNEX EXTERIOR FRAMING AT BASE**
SCALE: 2"=1'-0"

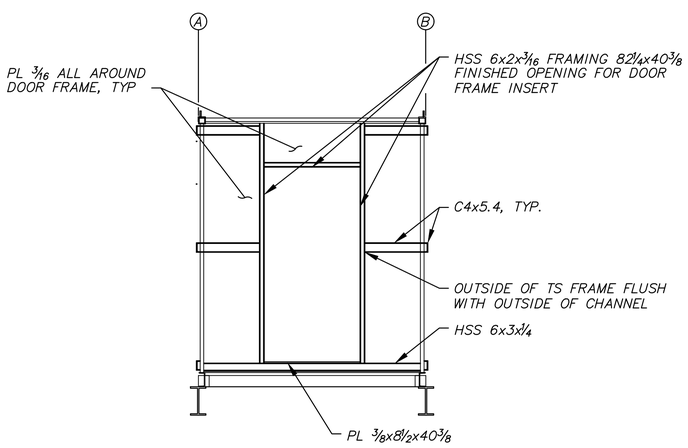

4 **CONNEX DOOR END FRAMING ELEVATION**
SCALE: 3/8"=1'-0"

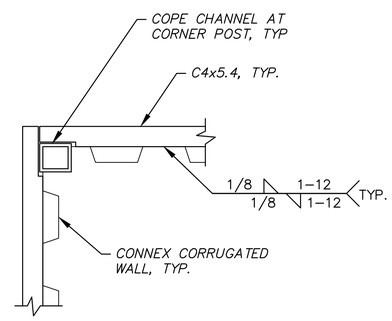

5 **CONNEX EXTERIOR FRAMING AT CORNER - PLAN**
SCALE: 2"=1'-0"

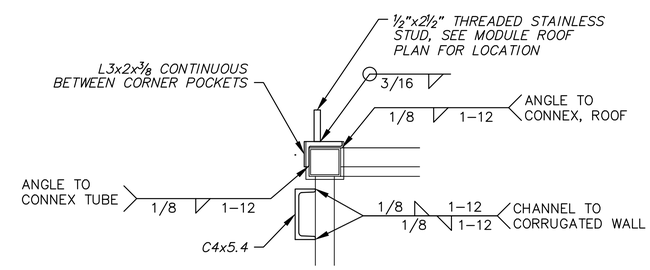

6 **CONNEX EXTERIOR FRAMING AT TOP**
SCALE: 2"=1'-0"

State of Alaska
Department of Commerce, Community and Economic Development
AIDEA/AEA
Rural Energy Group
813 West Northern Lights Blvd.
Anchorage, Alaska 99503
ALASKA ENERGY AUTHORITY

STATE OF ALASKA
David G. Thompson
Registered Professional Engineer
Registration No. SE 14226
8/27/2018

Gray Stassel Engineering, Inc.
P.O. 111405, Anchorage, AK 99511 (907)349-0100

CRW ENGINEERING GROUP, LLC
3940 ARCTIC BLVD. SUITE 300
ANCHORAGE, ALASKA 99503
PHONE: (907) 562-3252
#AECL882-AK

TWIN HILLS, ALASKA
RURAL POWER SYSTEM UPGRADE
STANDBY MODULE CONNEX ROOF PLAN & DETAILS

NO.	REVISION	BY	DATE
0	ISSUED FOR CONSTRUCTION	TRK	8/2018

Plot Date 10/2/18
Designed BCG
Drawn KEB
Approved DGT

Sheet No. S2.2

File: J:\JobsData\30404.09 Twin Hills RPSU\00 CADD\01 Working Set\05 Structural\30404.09 Connex Struc-Details.dwg

NOTES

1. ALL WORK ON THIS SHEET SHALL BE ADDITIVE ALTERNATE B.

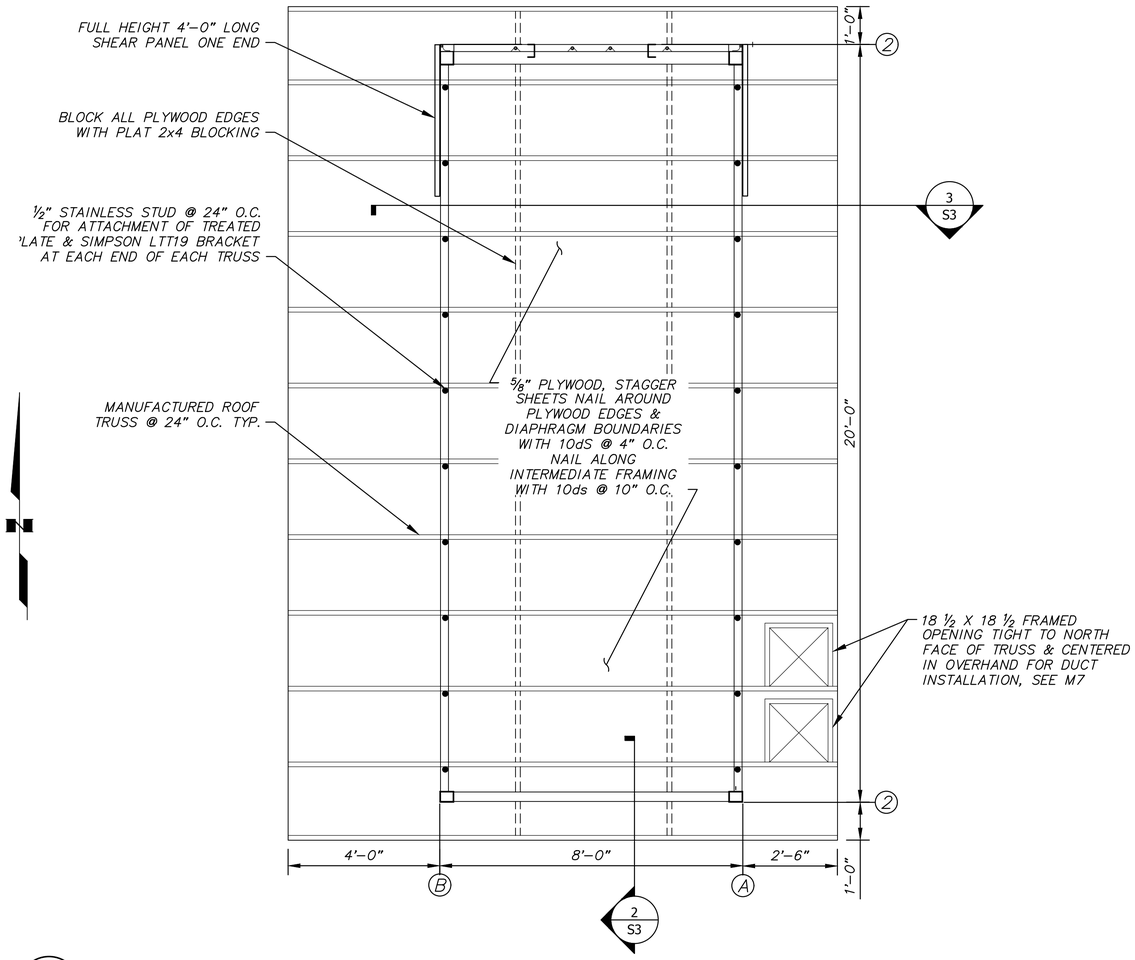

1 **ROOF TRUSS PLAN**

SCALE: 1/2" = 1'-0"

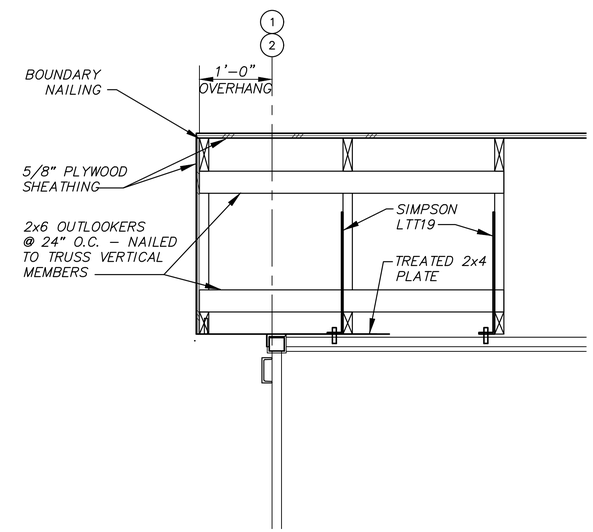

2 **TYPICAL GABLE**

SCALE: 1" = 1'-0"

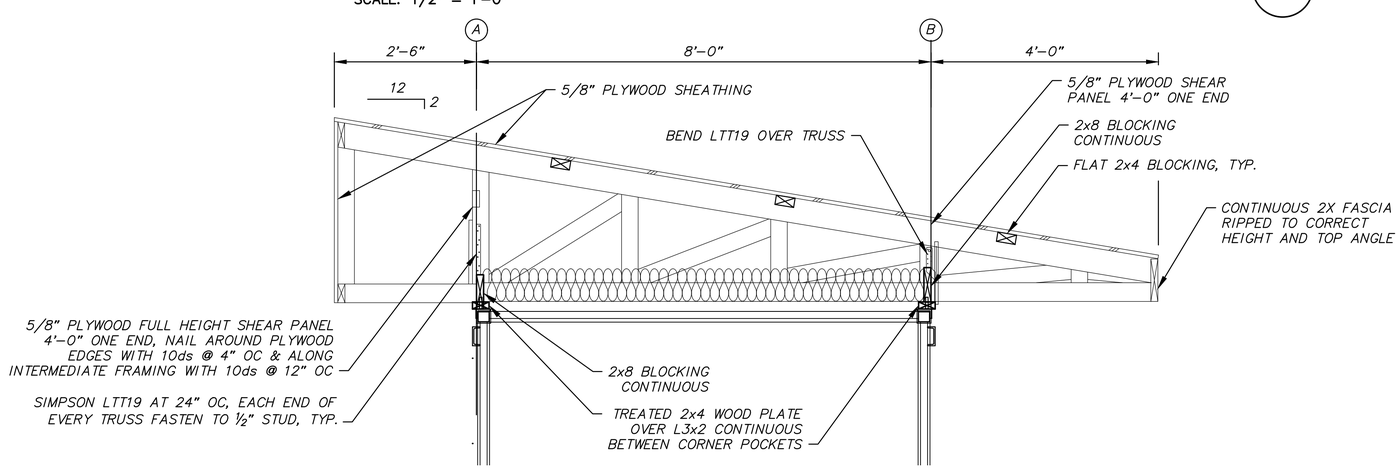

3 **ROOF TRUSS INSTALLATION**

SCALE: 1/2" = 1'-0"

State of Alaska
Department of Commerce, Community and Economic Development
AIDEA/AEA
Rural Energy Group
813 West Northern Lights Blvd.
Anchorage, Alaska 99503
ALASKA ENERGY AUTHORITY

STATE OF ALASKA
49th
David G. Thompson
REGISTERED PROFESSIONAL ENGINEER
No. SE 14226
8/27/2018

Gray Stassel Engineering, Inc.
P.O. 111405, Anchorage, AK 99511 (907)349-0100

CRW ENGINEERING GROUP, LLC
3940 ARCTIC BLVD. SUITE 300
ANCHORAGE, ALASKA 99503
PHONE: (907) 562-3252
#AECL882-AK

TWIN HILLS, ALASKA
RURAL POWER SYSTEM UPGRADE
STANDBY MODULE TRUSS ROOF PLAN & DETAILS

NO.	REVISION	BY	DATE
0	ISSUED FOR CONSTRUCTION	TRK	8/2018

Plot Date 10/2/18
Designed BCG
Drawn KEB
Approved DGT

Sheet No. S3

File: J:\JobsData\30404.09 Twin Hills RPSU\00 CADD\01 Working Set\05 Structural\30404.09 Connex Roff Plan & Details.dwg

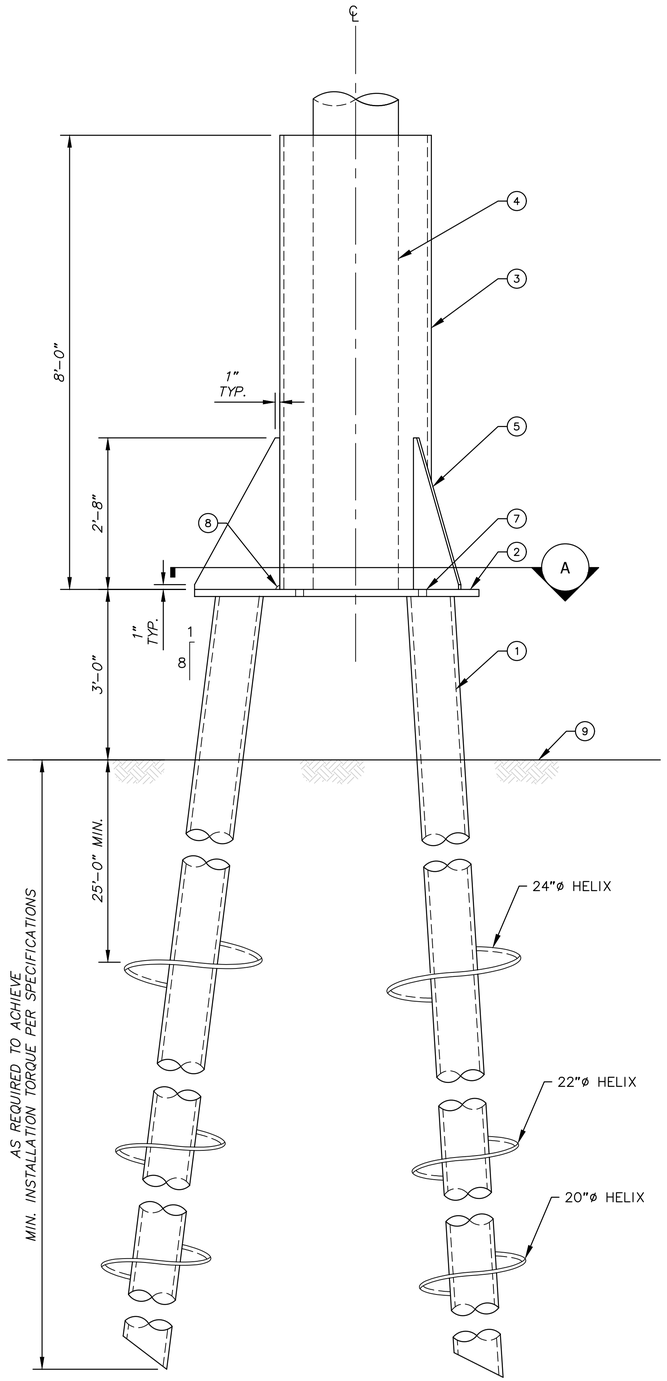

NOTES:

1. 10" SCH. 40 HELICAL ANCHORS, TYPICAL OF 3.
2. 1 ½" A572, GR 50. STEEL PLATE.
3. 32" DIA. STD STEEL PIPE.
4. WOOD POLE, PER ELECTRICAL DRAWINGS.
5. ¾" A572, GR 50. STEEL GUSSET PLATE, TYPICAL OF 3.
6. NOT USED.
7. ¼" DIA. WEEP HOLE, TYPICAL OF 6.
8. TYPICAL: 1"x1" COPE.
9. FINISHED GRADE.
10. PEA GRAVEL.

1 PILE/POLE CONNECTION DETAIL

SCALE: NTS

GENERAL NOTES:

A. DESIGN CRITERIA: 2012 EDITION OF THE INTERNATIONAL BUILDING CODE.

B. LOADS (TRANSFERRED TO PILE CAP FROM POLE): Mu=250 KIP-FT, Vu=5 KIPS, Pu=40 KIPS.

C. FOUNDATION DESIGN IS BASED ON SOILS REPORT BY GOLDER AND ASSOCIATES, REPORT NUMBER 1402344. ALL CONSTRUCTION SHALL CONFORM TO THE RECOMMENDATIONS OF THE SOILS REPORT.

D. STRUCTURAL STEEL MATERIALS SHALL BE AS FOLLOWS U.N.O.:
PIPES = ASTM A53, GRADE B (Fy = 35 KSI)
PLATES = ASTM A36 (Fy = 36 KSI), UNLESS NOTED OTHERWISE.

E. ALL WELDING SHALL BE DONE WITH E70 SERIES LOW HYDROGEN. PERIODIC SPECIAL INSPECTION OF ALL WELDING IS REQUIRED PER THE 2012 IBC, SECTION 1704.

F. SHOP PAINT ALL STEEL SURFACES WITH 3 COATS OF RUST-INHIBITING PAINT, EXCEPT AT SURFACES MORE THAN 2 FEET BELOW GRADE.

G. THE STRUCTURAL CONSTRUCTION DOCUMENTS REPRESENT THE FINISHED STRUCTURE. THEY DO NOT INDICATE THE METHOD OR SEQUENCE OF CONSTRUCTION. THE CONTRACTOR SHALL BE RESPONSIBLE FOR AND PROVIDE ALL MEASURES NECESSARY TO PROTECT THE STRUCTURE DURING CONSTRUCTION. SUCH MEASURES SHALL INCLUDE, BUT NOT BE LIMITED TO, BRACING, SHORING FOR LOADS DUE TO CONSTRUCTION EQUIPMENT, ETC. THE STRUCTURAL ENGINEER SHALL NOT BE RESPONSIBLE FOR THE CONTRACTOR'S MEANS, METHODS, TECHNIQUES, SEQUENCES FOR PROCEDURE OF CONSTRUCTION, OR THE SAFETY PRECAUTIONS AND THE PROGRAMS INCIDENT THERETO. THE CONTRACTOR SHALL BE RESPONSIBLE FOR THE DESIGN AND IMPLEMENTATION OF ALL SCAFFOLDING, BRACING AND SHORING.

△1 NOTES
1. ALL WORK ON THIS SHEET SHALL BE BASE BID.

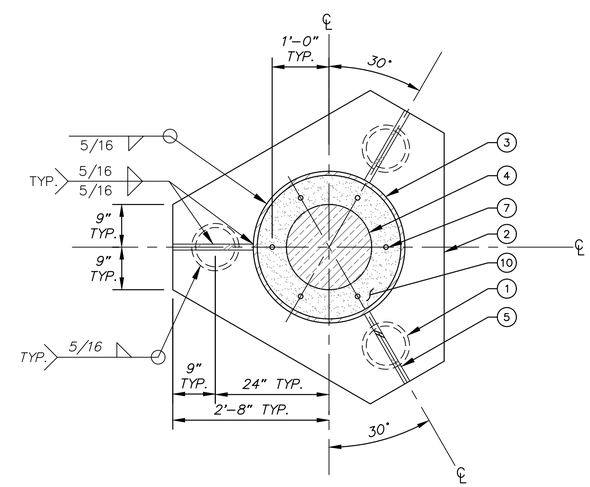

A POLE/PILE AT STEEL PILE CAP PLATE - PLAN VIEW

SCALE: NTS

State of Alaska
Department of Commerce, Community and Economic Development
AIDEA/AEA
Rural Energy Group
813 West Northern Lights Blvd.
Anchorage, Alaska 99503

STATE OF ALASKA 49TH
Nicholas J. Chorombos
SE-14180
REGISTERED STRUCTURAL ENGINEER

CRW ENGINEERING GROUP, LLC
3940 ARCTIC BLVD. SUITE 300
ANCHORAGE, ALASKA 99503
PHONE: (907) 562-3252
#AECL882-AK

TWIN HILLS, ALASKA
RURAL POWER SYSTEM UPGRADE
INTERTIE PILE DETAILS

NO.	REVISION	BY	DATE
0	ISSUED FOR CONSTRUCTION	TRK	8/2018
△1	REVISED PER ADDENDUM 1	TRK	10/2018

Plot Date 10/2/18
Designed
Drawn
Approved

Sheet No. S4

File: J:\JobsData\30404.09 Twin Hills RPSU\00 CADD\01 Working Set\05 Structural\30404.09 Details-Pile.dwg

NOTES

1. ALL WORK ON THIS SHEET SHALL BE ADDITIVE ALTERNATE B.

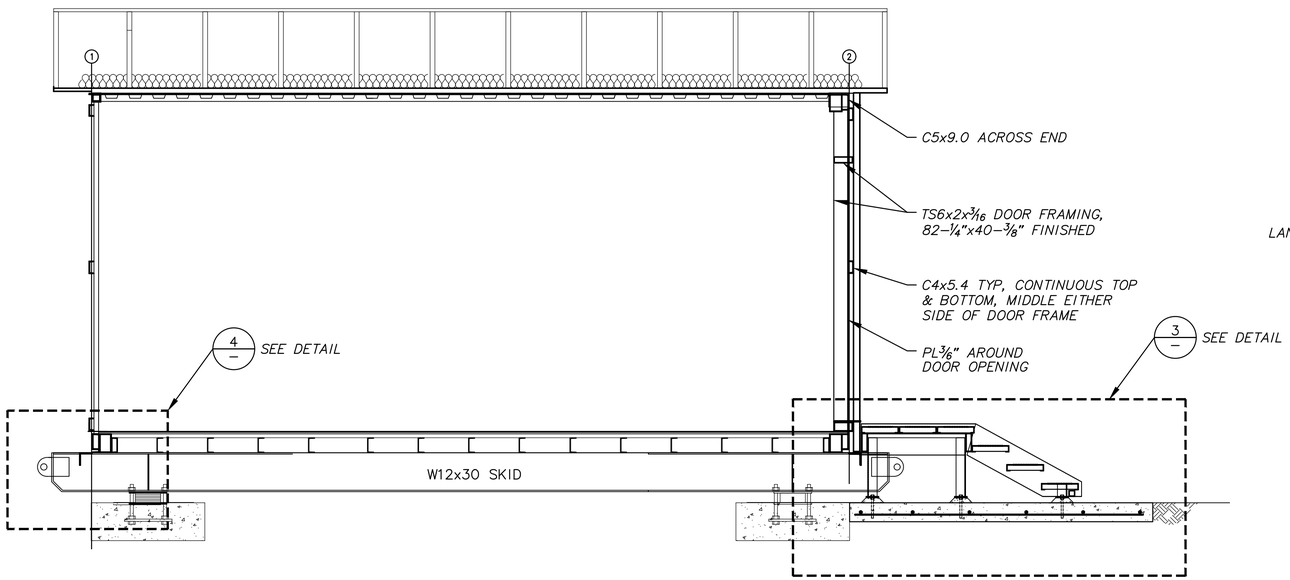

1 **ELEVATION**
SCALE: 1/2" = 1'-0"

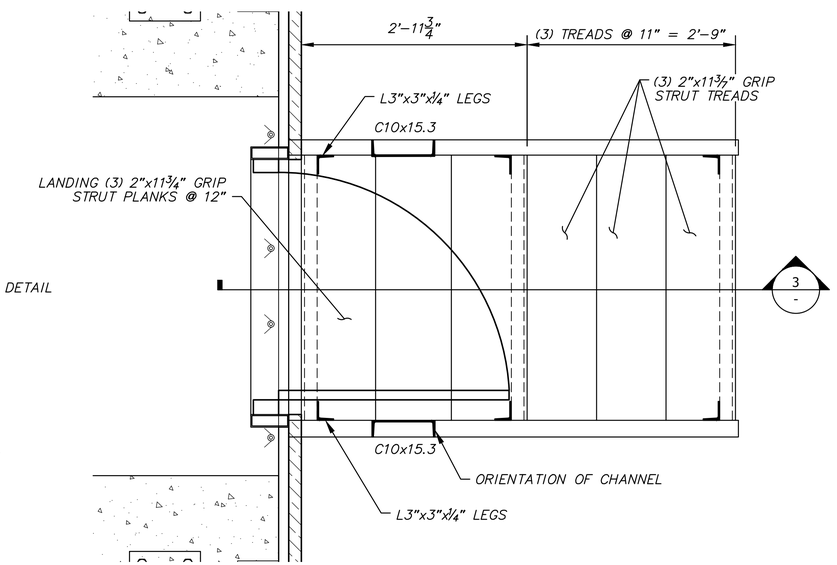

2 **STAIR PLAN**
SCALE: 1" = 1'-0"

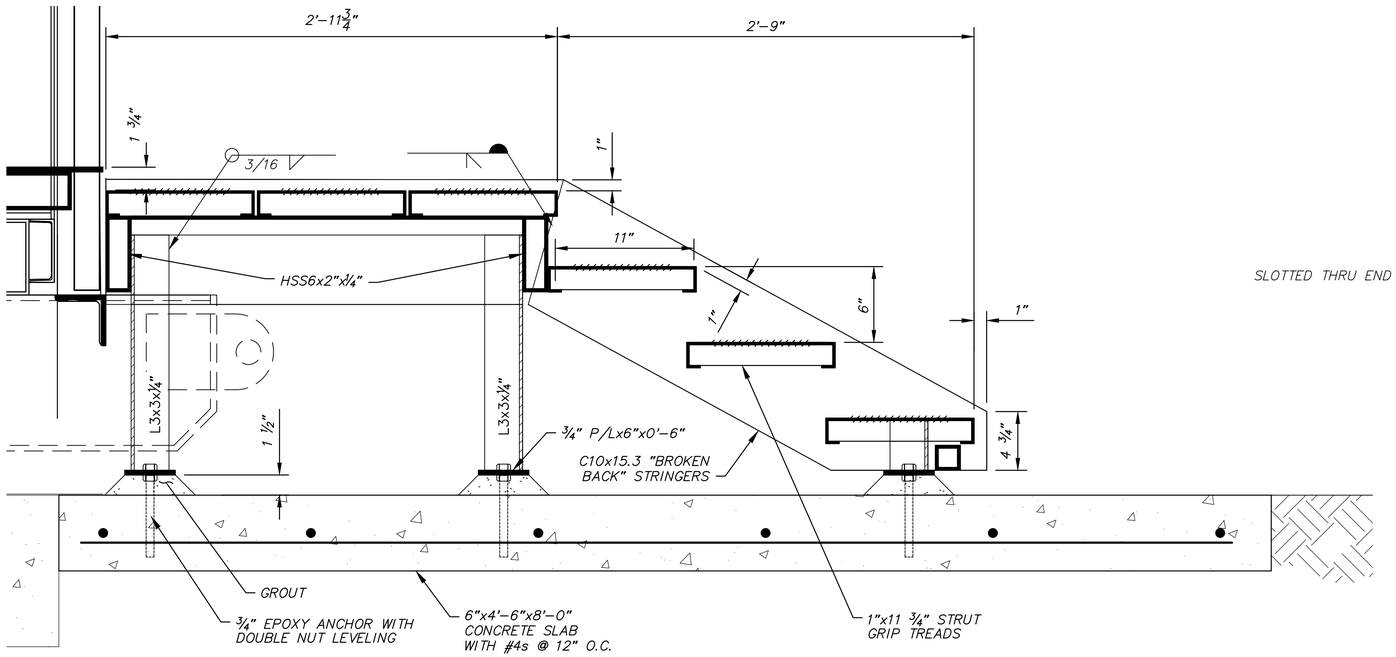

3 **STAIR SECTION**
SCALE: 2" = 1'-0"

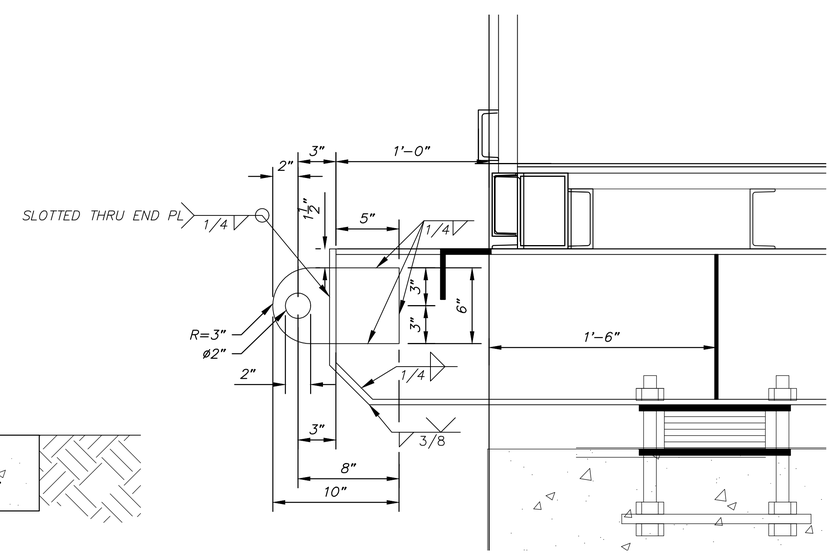

4 **TYPICAL SKID END**
SCALE: 2" = 1'-0"

State of Alaska
Department of Commerce, Community and Economic Development
AIDEA/AEA
Rural Energy Group
813 West Northern Lights Blvd.
Anchorage, Alaska 99503
ALASKA ENERGY AUTHORITY

STATE OF ALASKA
David G. Thompson
No. SE 14226
8/27/2018
REGISTERED PROFESSIONAL ENGINEER

Gray Stassel Engineering, Inc.
P.O. 111405, Anchorage, AK 99511 (907)349-0100

CRW ENGINEERING GROUP, LLC
3940 ARCTIC BLVD. SUITE 300
ANCHORAGE, ALASKA 99503
PHONE: (907) 562-3252
#AECL882-AK

TWIN HILLS, ALASKA
RURAL POWER SYSTEM UPGRADE
STAIR DETAILS

NO.	REVISION	BY	DATE
0	ISSUED FOR CONSTRUCTION	TRK	8/2018

Plot Date 10/2/18
Designed BCG
Drawn KEB
Approved DGT

Sheet No. S5

File: J:\JobsData\30404.09 Twin Hills RPSU\00 CADD\01 Working Set\05 Structural\30404.09 Connex Roff Plan & Details.dwg

NOTES

1. ALL WORK ON THIS SHEET SHALL BE ADDITIVE ALTERNATE B.

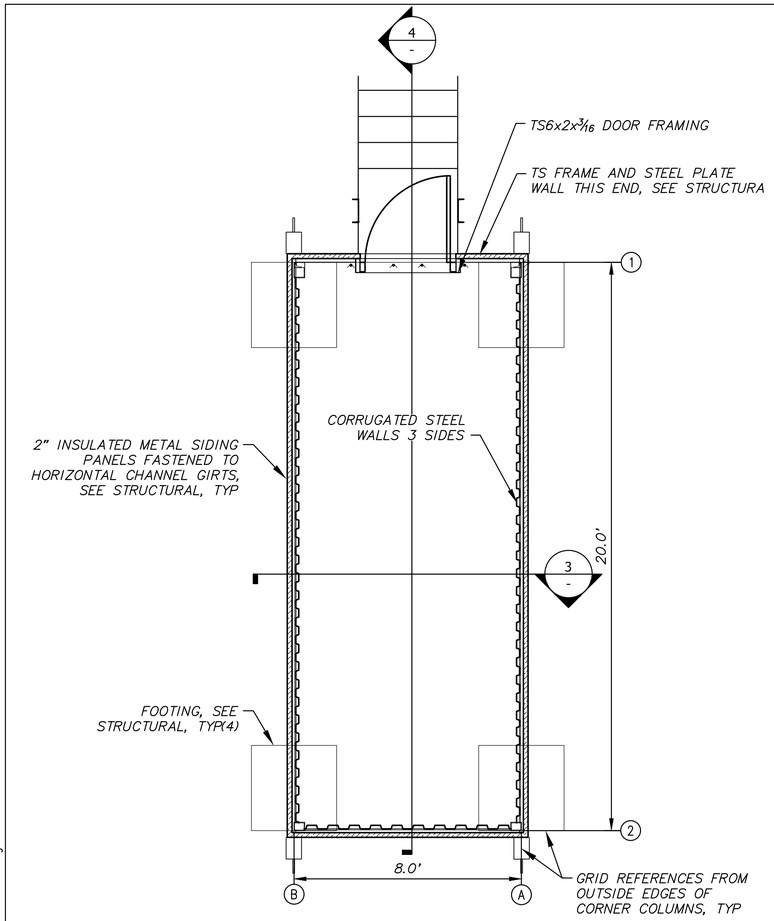

1 **FLOOR PLAN**

SCALE: 3/8"=1'-0"

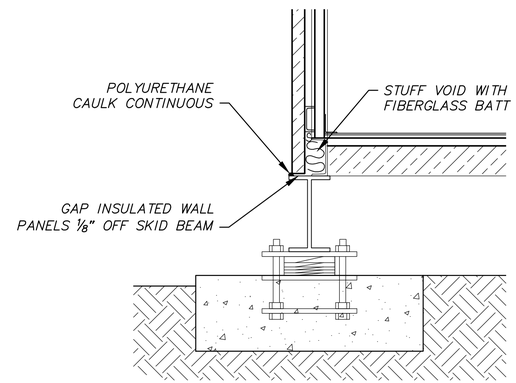

2 **SIDING BASE DETAIL**

SCALE: 3/8"=1'-0"

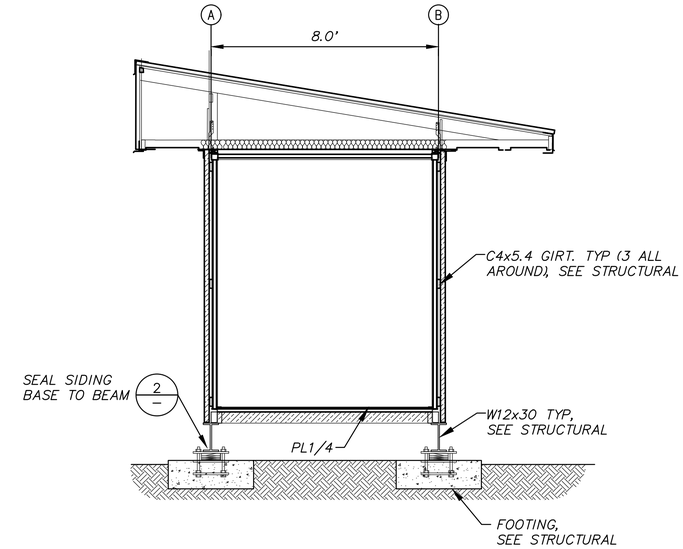

3 **SECTION**

SCALE: 3/8"=1'-0"

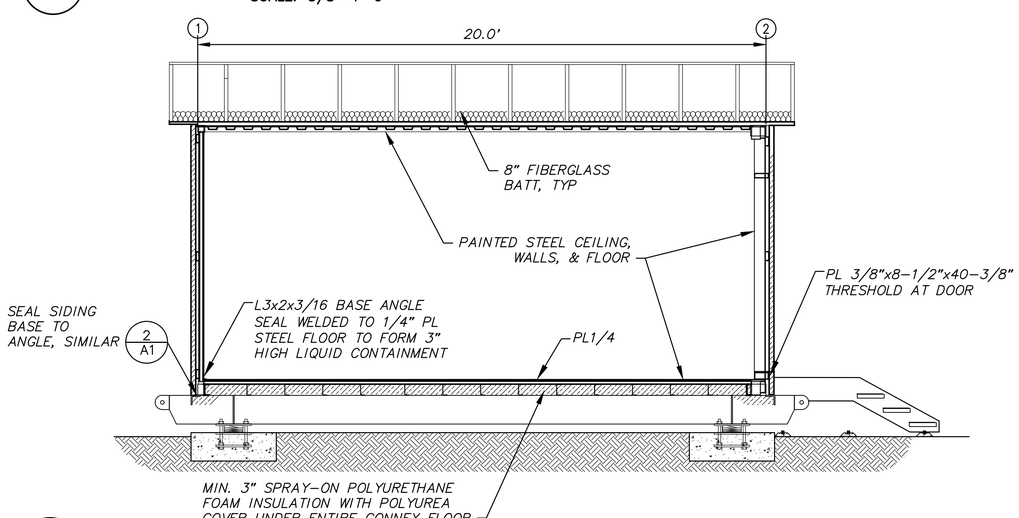

4 **SECTION**

SCALE: 3/8"=1'-0"

PAINTING NOTES:

MODULE EXTERIOR COATING: UPON COMPLETION OF ALL MODULE MODIFICATIONS AND PRIOR TO INSTALLATION OF SIDING PERFORM THE FOLLOWING:

1. SANDBLAST ALL WELD AFFECTED AREAS AND ALL NEW STEEL INCLUDING SKID BEAM, END WALL FRAMING, MECHANICAL PENETRATIONS, ROOF ATTACHMENT ANGLE, ETC. IN ACCORDANCE WITH SSPC-SP-10.
2. PRIME WITHIN 4 HOURS OF SANDBLASTING. PRIME WITH REINFORCED INORGANIC ZINC PRIMER, DEVOE CATHA-COAT 302, COLOR GREEN, TO 3 MILS DRY FILM THICKNESS.
3. FINISH COAT ALL PRIMED AREAS THAT WILL NOT BE COVERED BY EXTERIOR SIDING AND ROOFING INCLUDING SKID BEAM, END WALL FRAMING, MECHANICAL PENETRATIONS, ETC. COVER WITH TWO COATS OF EPOXY, DEVOE BAR-RUST 236, COLOR WHITE, TO 10 MILS MINIMUM DRY FILM THICKNESS. FINISH WITH ONE COAT OF ALIPHATIC URETHANE ENAMEL, DEVOE DEVTHANE 389, COLOR WHITE, TO 3 MILS DRY FILM THICKNESS.

MODULE INTERIOR COATING: UPON COMPLETION OF ALL MODULE MODIFICATIONS INCLUDING CONTAINMENT FLOOR, GROUT, MECHANICAL PENETRATIONS, MECHANICAL SUPPORTS, END WALL FRAMING, ETC. AND PRIOR TO INSTALLATION OF MECHANICAL OR ELECTRICAL SYSTEMS AND EQUIPMENT PERFORM THE FOLLOWING:

1. SANDBLAST ALL INTERIOR SURFACES IN ACCORDANCE WITH SSPC-SP-6.
2. PAINT WITH TWO COATS OF SHERWIN WILLIAMS MACROPOXY 646, COLOR STRUCTURAL GRAY 4031, TO 8 MILS MINIMUM DRY FILM THICKNESS.

CODE ANALYSIS – 2012 EDITION INTERNATIONAL BUILDING CODE	
OCCUPANCY CLASSIFICATION	
GROUP F-1:FACTORY INDUSTRIAL MODERATE HAZARD – ELECTRIC GENERATION PLANT	REF: IBC-2012, SEC. 306.2
TYPE OF CONSTRUCTION	REF: IBC-2012, TABLE 601
TYPE V-B (NON-RATED)	REF: IBC-2012, SEC. 602.5
BUILDING HEIGHTS AND AREAS	REF: IBC-2012, TABLE 503
ALLOWED 40'-0" 1 STORY 8,500 S.F.	PROVIDED: 15'-0" 1 STORY 160 S.F.
FIRE RESISTANCE RATING REQUIREMENTS FOR BUILDING ELEMENTS	REF: IBC-2012, TABLE 601
STRUCTURAL FRAME 0 HR BEARING WALLS 0 HR INTERIOR PARTITIONS 0 HR FLOOR 0 HR ROOF 0 HR	
FIRE RESISTANCE RATING REQUIREMENTS FOR EXTERIOR WALLS	REF: IBC-2012, TABLE 602
EXTERIOR WALLS 10' ≤ X < 30' 0 HR	
FIRE PROTECTION SYSTEM	REF: IBC-2012, SEC. 903.2.4
FIRE PROTECTION NOT REQUIRED.	
OCCUPANT LOAD	REF: IBC-2012, TABLE 1004.1.2
MECHANICAL/STORAGE = 300 S.F./PERSON	160 S.F./300 S.F. PER OCCUPANT = 1 OCCUPANTS
MEANS OF EGRESS – TRAVEL DISTANCE	REF: IBC-2012, TABLE 1016.2
REQUIRED 200' PROVIDED 19'	
NOTE: SEE CIVIL SITE PLAN FOR LOCATION AND LAYOUT. PROVIDE REQUIRED SEPARATION TO PROPERTY BOUNDARIES IN ACCORDANCE WITH CODE ANALYSIS.	

State of Alaska
Department of Commerce, Community and Economic Development
AIDEA/AEA
Rural Energy Group
813 West Northern Lights Blvd.
Anchorage, Alaska 99503
ALASKA ENERGY AUTHORITY

STATE OF ALASKA
49th
David G. Thompson
REGISTERED PROFESSIONAL ENGINEER
Reg. No. SE 14226
8/27/2018

Gray Stassel Engineering, Inc.
P.O. 111405, Anchorage, AK 99511 (907)349-0100

CRW ENGINEERING GROUP, LLC
3940 ARCTIC BLVD. SUITE 300
ANCHORAGE, ALASKA 99503
PHONE: (907) 562-3252
#AECL882-AK

TWIN HILLS, ALASKA
RURAL POWER SYSTEM UPGRADE
STANDBY MODULE FLOOR PLAN, SECTIONS, DETAILS & CODE ANALYSIS

NO.	REVISION	BY	DATE
0	ISSUED FOR CONSTRUCTION	TRK	8/2018

Plot Date 10/2/18
Designed BCG
Drawn KEB
Approved DGT

Sheet No. A1

File: J:\JobsData\30404.09 Twin Hills RPSU\00 CADD\01 Working Set\07 Architectural\30404.09 Connex Plan And Sections.dwg

NOTES

1. ALL WORK ON THIS SHEET SHALL BE ADDITIVE ALTERNATE B.

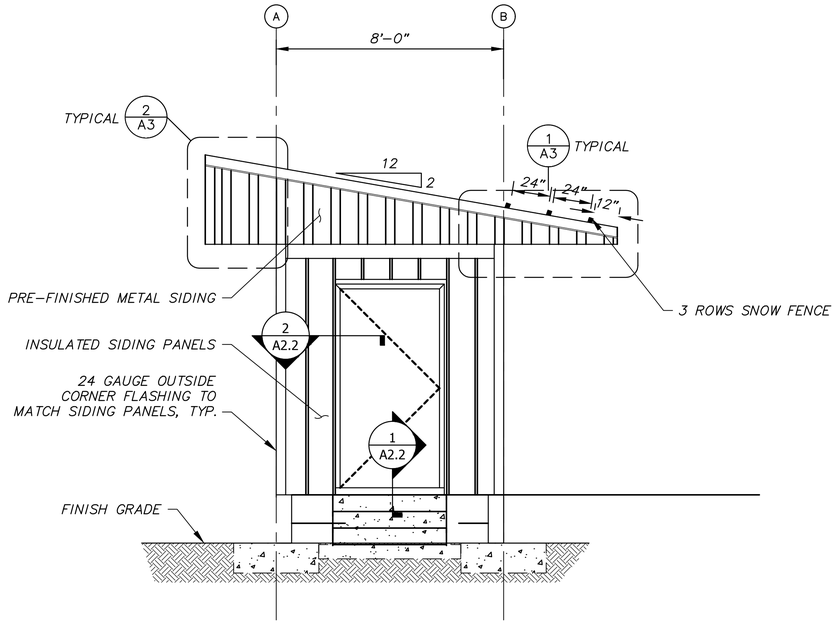

1 **NORTH ELEVATION**

SCALE: 3/8"=1'-0"

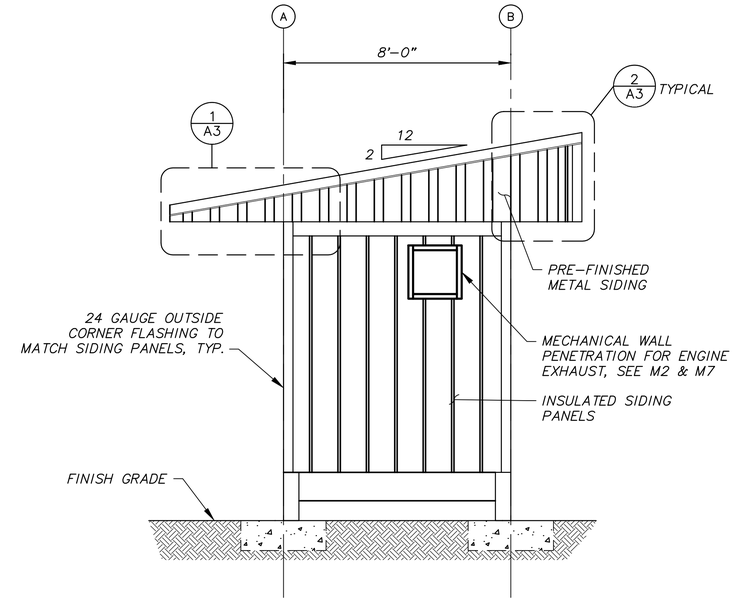

2 **SOUTH ELEVATION**

SCALE: 3/8"=1'-0"

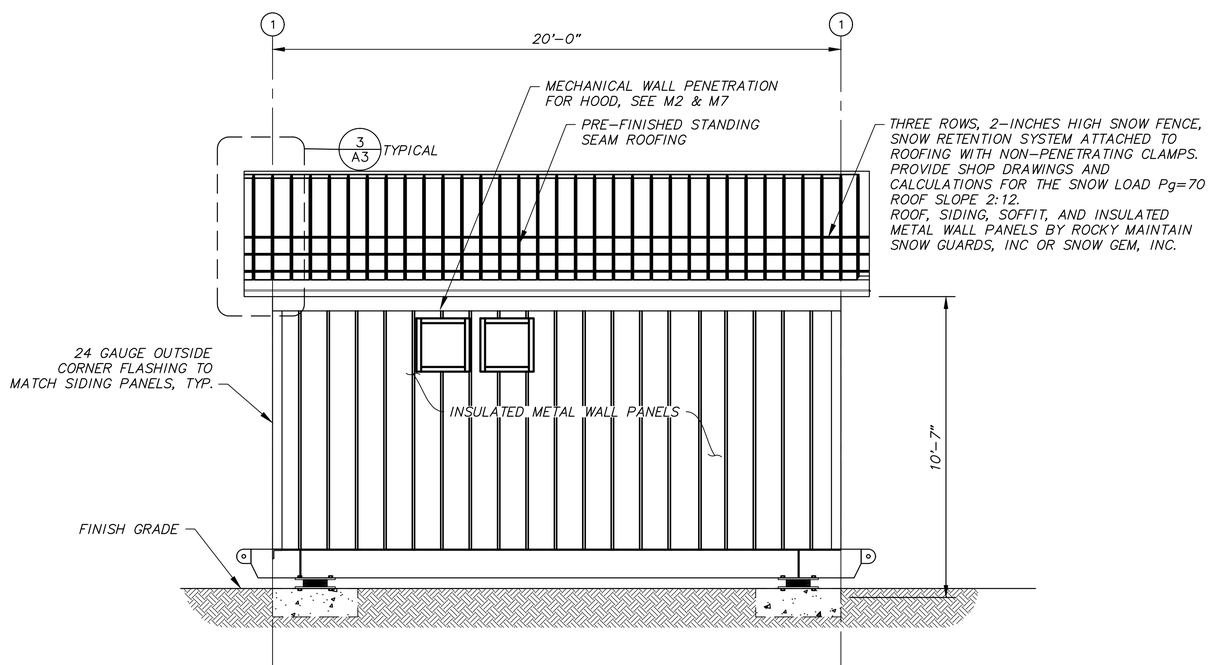

3 **WEST ELEVATION**

SCALE: 3/8"=1'-0"

STANDING SEAM METAL ROOF
ROOFING SYSTEM STANDING SEAM PANELS SHALL BE MIN 24 GAUGE GALVANIZED STEEL, 16" NET CONVERGE, 1-5/8" HIGH RIBS AT 8" O.C. KYNAR FINISH. AEP SPAN KLIP-RIB OR EQUAL. COLOR COOL FOREST GREEN.

SIDING FOR TRUSS ROOF GABLES AND FASCIA
SIDING PANELS SHALL BE MIN 24 GAUGE GALVANIZED STEEL, 36" NET COVERAGE, 1-1/4" HIGH MAJOR RIBS AND 1/4 " HIGH MINOR RIBS AT 12" O.C., KYNAR FINISH, AEP SPAN SUPER-SPAN OR EQUAL. COLOR COOL FOREST GREEN.

EXTERIOR SIDING SYSTEM TRIM/FLASHING SHALL BE MIN 24 GAUGE GALVANIZED STEEL, KYNAR FINISH TO MATCH EXTERIOR SIDING PANELS UNLESS SPECIFICALLY INDICATED OTHERWISE.

PANELS FOR TRUSS ROOF SOFFIT
VENTED SOFFIT PANELS SHALL BE 24 GAUGE GALVANIZED STEEL, 12" NET COVERAGE, KYNAR FINISH, 1" STANDOFF FROM SUBSTRATE, CONCEALED FASTENERS, WITH TWO PENCIL RIBS PROVIDING MINIMUM 7.8% NET FREE AREA. AEP SPAN FLUSH PANEL OR EQUAL. COLOR COOL FOREST GREE.

INSULATED METAL WALL PANELS FOR CONNEX
INSULATED METAL WALL PANELS SHALL HAVE 2" POLYURETHANE CORE FULLY BONDED TO 24 GAUGE GALVANIZED STEEL EXTERIOR AND INTERIOR FACES, MESA WAVE PROFILE, 70% PVDF FLOUROPOLYMER FINISH. METLSPAN III CF INSULATED WALL PANEL OR EQUAL. COLOR SANDSTONE.

State of Alaska
Department of Commerce, Community and Economic Development
AIDEA/AEA
Rural Energy Group
813 West Northern Lights Blvd.
Anchorage, Alaska 99503
ALASKA ENERGY AUTHORITY

STATE OF ALASKA
David G. Thompson
SE 14226
8/27/2018
REGISTERED PROFESSIONAL ENGINEER

Gray Stassel Engineering, Inc.
P.O. 111405, Anchorage, AK 99511 (907)349-0100

CRW ENGINEERING GROUP, LLC
3940 ARCTIC BLVD. SUITE 300
ANCHORAGE, ALASKA 99503
PHONE: (907) 562-3252
#AECL882-AK

TWIN HILLS, ALASKA
RURAL POWER SYSTEM UPGRADE
STANDBY MODULE EXTERIOR ELEVATIONS

NO.	REVISION	BY	DATE
0	ISSUED FOR CONSTRUCTION	TRK	8/2018

Plot Date 10/2/18
Designed BCG
Drawn KEB
Approved DGT

Sheet No. A2.1

File: J:\JobsData\30404.09 Twin Hills RPSU\00 CADD\01 Working Set\07 Architectural\30404.09 Connex Elevations.dwg

NOTES

1. ALL WORK ON THIS SHEET SHALL BE ADDITIVE ALTERNATE B.

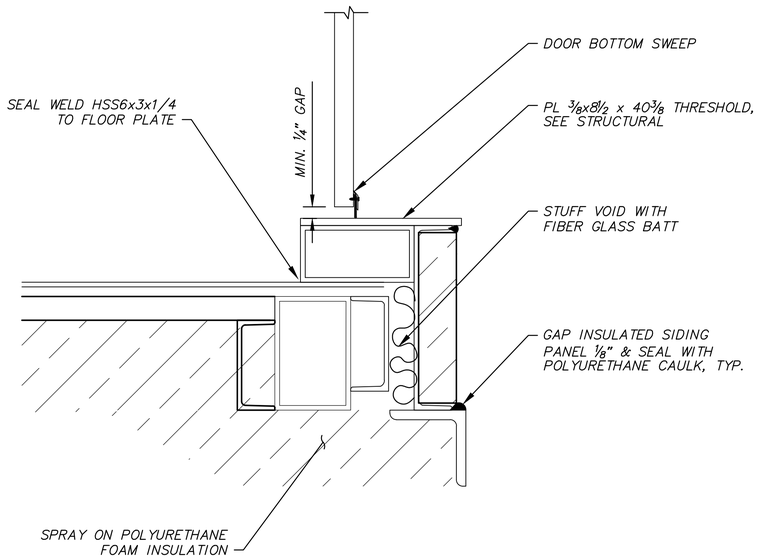

1 **DOOR THRESHOLD**

SCALE: 3"=1'-0"

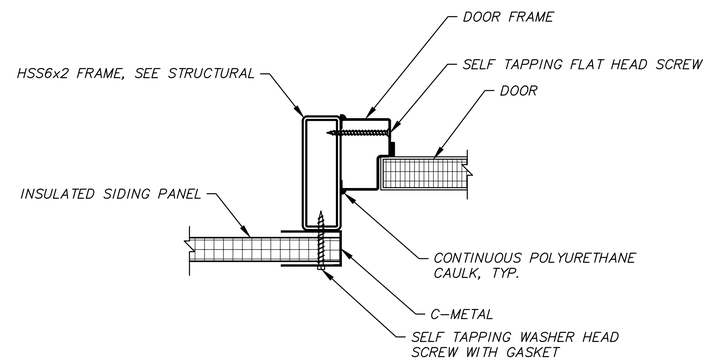

2 **DOOR JAMB/HEAD**

SCALE: 3"=1'-0"

DOOR CONSTRUCTION				FRAME CONSTRUCTION		
DOOR NO.	WIDTH	HEIGHT	THICK NESS	TYPE	PROFILE	THROAT DEPTH
101	3'-0"	6'-8"	1-3/4"	WELDED	SINGLE RABBETED	3-3/4"

DOOR HARDWARE:

3	EA	HINGES	HAGER	BB1191 4.5 x 4.5NRP x 630
1	EA	EXIT LOCK	SCHLAGE	ND25D x RHODES x 626
1	EA	DOOR CLOSER	LCN	4041 x CUSH x 689
1	EA	WEATHER STRIP	PEMKO	2891AS x 36 (HEAD)
2	EA	WEATHER STRIP	PEMKO	290AS x 80 (SIDE JAMBS)
1	EA	BOTTOM SWEEP	HAGER	750S x 36

DOOR ASSEMBLY NOTES:

1) DOORS 16 GAUGE STEEL HOLLOW METAL INSULATED WITH TOPS INVERTED, CAULKED, AND SEALED. DOOR FRAMES 16 GAUGE STEEL WELDED CONSTRUCTION DIMPLED AND PUNCHED.

2) DOOR ASSEMBLIES DO NOT REQUIRE FIRE RATING.

3) DOORS AND FRAMES GALVANIZED AND FACTORY PRIMED. SPRAY FINISH DOORS AND FRAMES WITH TWO COATS OF SHERWIN WILLIAMS MACROPOXY 646, NO SUBSTITUTES, COLOR STRUCTURAL GRAY 4031.

State of Alaska
Department of Commerce, Community and Economic Development
AIDEA/AEA
Rural Energy Group
813 West Northern Lights Blvd.
Anchorage, Alaska 99503
ALASKA ENERGY AUTHORITY

STATE OF ALASKA
DAVID G. THOMPSON
REGISTERED PROFESSIONAL ENGINEER
No. SE 14226
8/27/2018

Gray Stassel Engineering, Inc.
P.O. 111405, Anchorage, AK 99511 (907)349-0100

CRW ENGINEERING GROUP, LLC
3940 ARCTIC BLVD. SUITE 300
ANCHORAGE, ALASKA 99503
PHONE: (907) 562-3252
#AECL882-AK

TWIN HILLS, ALASKA

RURAL POWER SYSTEM UPGRADE

STANDBY MODULE DOOR DETAILS AND SCHEDULE

NO.	REVISION	BY	DATE
0	ISSUED FOR CONSTRUCTION	TRK	8/2018

Plot Date 10/2/18
Designed BCG
Drawn KEB
Approved DGT

Sheet No. A2.2

File: J:\JobsData\30404.09 Twin Hills RPSU\00 CADD\01 Working Set\07 Architectural\30404.09 Connex Elevations.dwg

NOTES

1. ALL WORK ON THIS SHEET SHALL BE ADDITIVE ALTERNATE B.

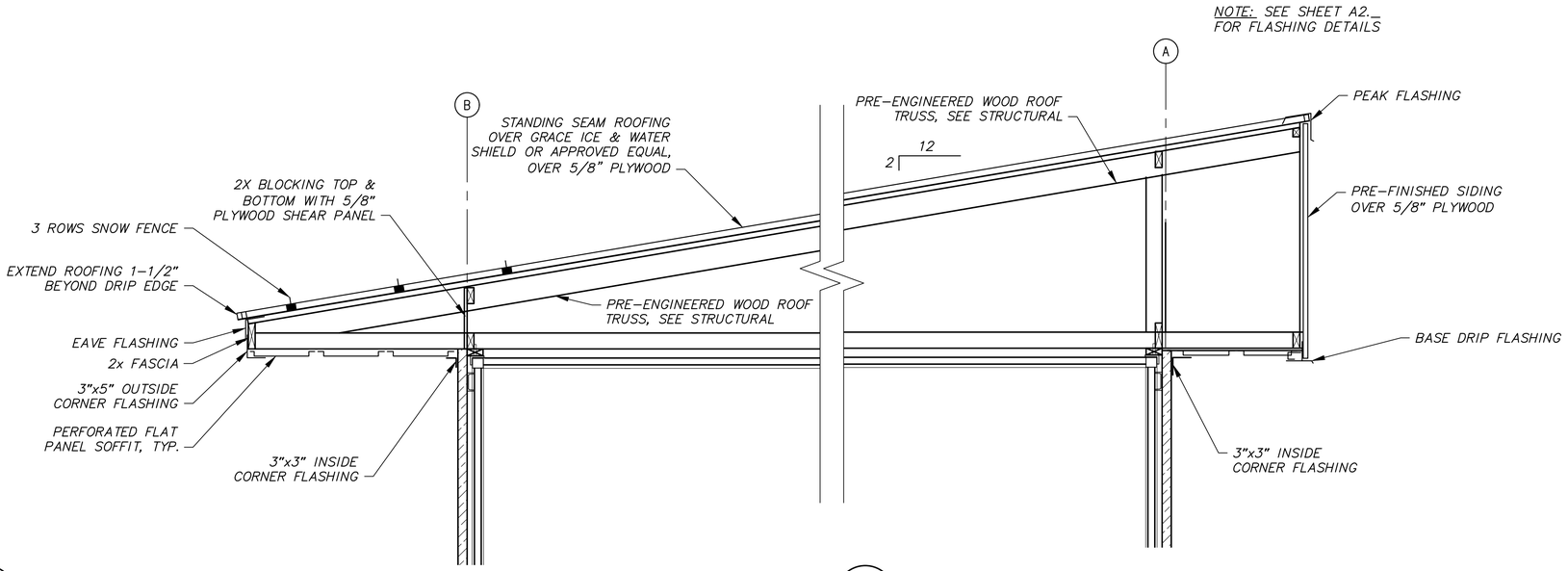

1 **EAVE DETAIL**
SCALE: 3/4"=1'-0"

2 **PEAK DETAIL**
SCALE: 3/4"=1'-0"

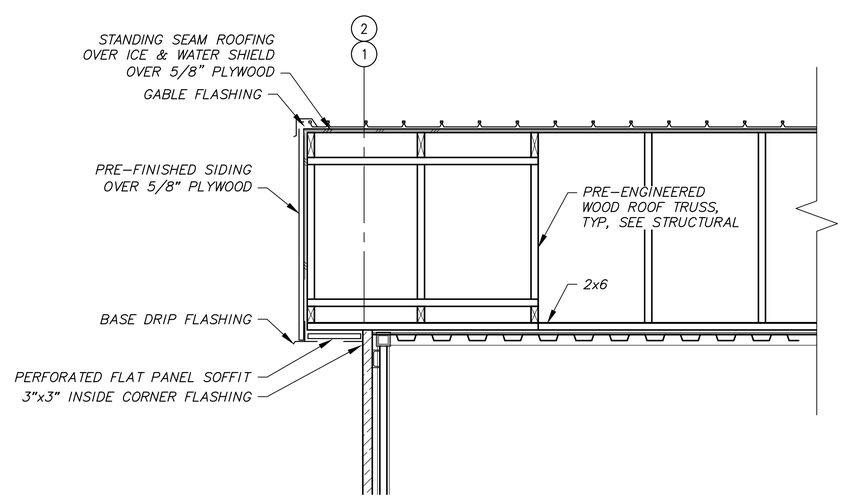

3 **GABLE DETAIL**
SCALE: 3/4"=1'-0"

ROOFING SYSTEM TRIM & FLASHING:

NOTE:
ALL FLASHING & TRIM 24GA COLOR TO MATCH ROOFING & SIDING.

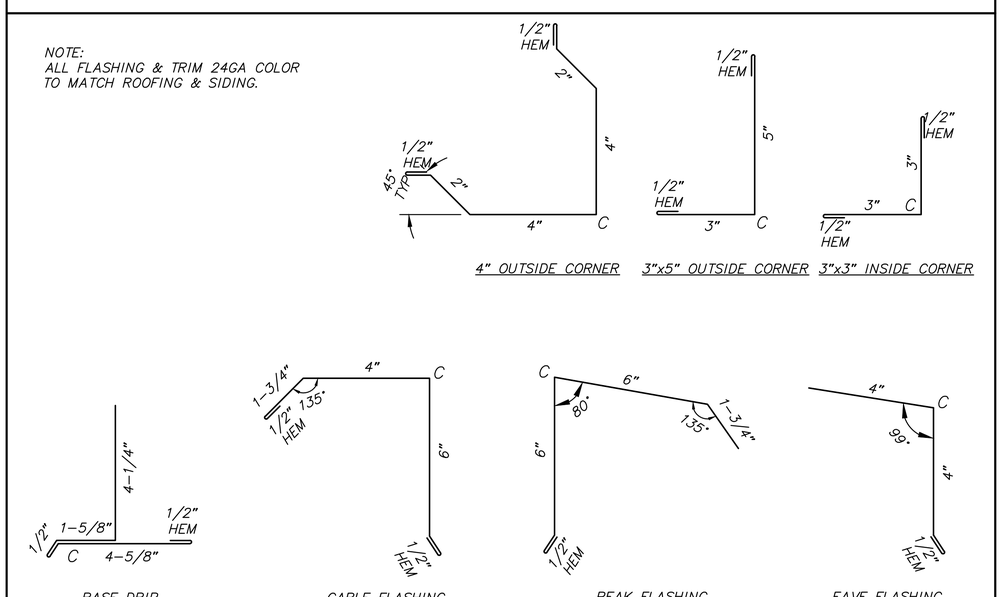

State of Alaska
Department of Commerce, Community and Economic Development
AIDEA/AEA
Rural Energy Group
813 West Northern Lights Blvd.
Anchorage, Alaska 99503
ALASKA ENERGY AUTHORITY

STATE OF ALASKA
49th
David G. Thompson
R.E.1
No. SE 14226
8/27/2018
REGISTERED PROFESSIONAL ENGINEER

Gray Stassel Engineering, Inc.
P.O. 111405, Anchorage, AK 99511 (907)349-0100

CRW ENGINEERING GROUP, LLC
3940 ARCTIC BLVD. SUITE 300
ANCHORAGE, ALASKA 99503
PHONE: (907) 562-3252
#AECL882-AK

TWIN HILLS, ALASKA
RURAL POWER SYSTEM UPGRADE
STANDBY MODULE ROOF PLANS & DETAILS

NO.	REVISION	BY	DATE
0	ISSUED FOR CONSTRUCTION	TRK	8/2018

Plot Date 10/2/18
Designed BCG
Drawn KEB
Approved DGT

Sheet No. A3

File: J:\JobsData\30404.09 Twin Hills RPSU\00 CADD\01 Working Set\07 Architectural\30404.09 Connex Roof Details.dwg

LEGEND

- BUTTERFLY VALVE
- BALL VALVE
- CHECK VALVE
- HOSE END DRAIN VALVE
- GAUGE COCK
- AUTOMATIC AIR VENT
- (T) THERMOMETER
- (P) PRESSURE GAUGE
- (DP) DIFFERENTIAL PRESSURE GAUGE
- (DT) DIGITAL THERMOSTAT
- [T] TEMPERATURE SENSOR
- [P] PRESSURE SENSOR
- FLEXIBLE CONNECTOR
- FLANGED JOINT
- UNION
- ELBOW TURNED UP
- ELBOW TURNED DOWN
- PIPING CONNECTION (TEE)
- CHANGE OF PIPE SIZE
- DIRECTION OF FLOW

ABBREVIATIONS

ø	DIAMETER (PHASE)
A	AMPS
AFF	ABOVE FINISHED FLOOR
BTU	BRITISH THERMAL UNIT
DFR	DIESEL FUEL RETURN
DFS	DIESEL FUEL SUPPLY
EWT	ENTERING WATER TEMPERATURE
EXIST	EXISTING
ECR	ENGINE COOLANT RETURN
ECS	ENGINE COOLANT SUPPLY
FPT	FEMALE PIPE THREAD
GA	GAUGE
GALV	GALVANIZED
GPM	GALLONS PER MINUTE
GRC	GALVANIZED RIGID CONDUIT
HP	HORSEPOWER
HRR	HEAT RECOVERY RETURN
HRS	HEAT RECOVERY SUPPLY
ID	INSIDE DIAMETER
KW	KILOWATT
LT	LIQUID TIGHT
LWT	LEAVING WATER TEMPERATURE
MAX	MAXIMUM
MBH	THOUSAND BTU PER HOUR
MIN	MINIMUM
MPT	MALE PIPE THREAD
NC	NORMALLY CLOSED
NO	NORMALLY OPEN
OC	ON CENTER
OD	OUTSIDE DIAMETER
PRV	PRESSURE RELIEF VALVE
PSI	POUNDS/PER SQUARE INCH
PSID	PSI DIFFERENTIAL
PSIG	PSI GAUGE
SCH	SCHEDULE
TDH	TOTAL DEVELOPED HEAD
TYP	TYPICAL
UOR	USED OIL RETURN
V	VOLTS
W	WATTS
WG	WATER GAUGE
WPD	WATER PRESSURE DROP

EQUIPMENT MANUFACTURER AND MODEL REQUIREMENT NOTE (APPLIES TO ALL SCHEDULES):
SPECIFIC PARTS REQUIRED NOT ONLY TO MEET PERFORMANCE FUNCTION BUT IN MANY CASES TO SUPPORT UTILITY REPLACEMENT PART STOCK. PROVIDE EXACT PART INDICATED UNLESS SPECIFICALLY NOTED "OR EQUAL".

INSTRUMENTATION EQUIPMENT SCHEDULE

SYMBOL	SERVICE/FUNCTION	DESCRIPTION	MANUFACTURER/MODEL
TLM	TANK LEVEL MONITOR PANEL	TANK LEVEL MONITOR CONSOLE FOR UP TO SIX TANKS, COLOR LCD SCREEN, ETHERNET CONNECTION WITH WEB INTERFACE, PROGRAMMABLE VOLUME CALCULATIONS WITH TEMP. COMPENSATION	FRANKLIN/INCON COLIBRI CL6D
(LS)	TANK LEVEL SENSOR PROBE	TOP-MOUNT TANK PROBE WITH INSTALLATION KIT FOR 2" NPT RISER, WATER TIGHT COMPRESSION GLAND FITTING FOR CABLE ENTRANCE. FRANKLIN FUEL SYSTEMS, NO SUBSTITUTES. PROBE AND RISER LENGTH AS INDICATED ON INSTALLATION DETAILS.	12' TANK PROBE: TSP-LL2-149-I 4' TANK PROBE: TSP-LL2-53-I FLOAT: INTSP-IDF2 2" FOR DSL INSTALLATION KIT: TSP-K2A
(FS)	DAY TANK/HOPPER FLOAT SWITCH	VERTICAL ACTION FLOAT SWITCH, REVERSIBLE 70VASPST NC/NO SWITCH, 1/8" NPT, 1"MAX ø BUNA-N FLOAT FOR S.G=.47, MINIMUM 60" LONG PVC COATED #20 AWG LEAD WIRES	INNOVATIVE COMPONENTS LS-12-111/2
(LCA)	GLYCOL EXP TANK	LOW COOLANT ALARM FLOAT SWITCH, SEE MECHANICAL DETAILS	MURPHY EL-150-K1

COOLANT SYSTEM EQUIPMENT SCHEDULE

SYMBOL	SERVICE/FUNCTION	DESCRIPTION	MANUFACTURER/MODEL
R-1	GLYCOL RADIATOR	SINGLE PASS, 5 ROW, VERTICAL CORE, 3" FLANGED CONNECTIONS, GALVANIZED COATING, EXPANDED METAL GUARD. 10,000 BTU/MIN AT 80°F AMBIENT, 70 GPM 50% ETHYLENE GLYCOL AT 200F IN, 0.5 PSI MAX GLYCOL PRESSURE DROP. 5 HP, 460 V, 3 PH, MOTOR SUITABLE FOR VFD OPERATION AT 10:1 TURNDOWN RATIO.	DIESEL RADIATOR PART NO. 3734 OR EQUAL
ET-1	GEN COOLANT EXPANSION TANK	18 GALLON CAPACITY TANK, 12.75" O.D x 36" LONG FABRICATED STEEL TANK, SEE FABRICATION DETAIL	CUSTOM FABRICATION
HP-EC	ENGINE COOLANT FILL HAND PUMP	DOUBLE ACTION PISTON HAND PUMP, ALUM HOUSING, SS PISTON SHAFT & LINER, BUNA-N SEALS, ANTI-SIPHONING VALVE.	GPI MODEL HP-100 OR EQUAL
GLYCOL FILTER	COOLANT CONDITIONER	SPIN ON ELEMENT: WF2055, 3/8" NPT STEEL HEAD: 3904378S, MOUNTING BRACKET: 256535S	FLEETGUARD PART#'S AS INDICATED
ADAPTER FITTING	EXPANSION TANK PRESSURE CAP	2" MPT FILLER NECK WITH 4 PSI CAP & 3/8"HOSE BARB VENT	ALASKA RUBBER FABRICATED FITTING, P/N IV8017SS2431307

HEATING SYSTEM EQUIPMENT SCHEDULE

SYMBOL	SERVICE/FUNCTION	DESCRIPTION	MANUFACTURER/MODEL
OSH	OIL-FIRED SPACE HEATER	SEALED DIRECT VENT OIL FIRED HEATER SUITABLE FOR USE WITH NO. 1 LOW SULPHUR FUEL OIL, MIN 87% AFUE HEATING EFFICIENCY, 3 FIRING RATES, 22 MBH OUTPUT, INTEGRAL CONTROL PANEL PROGRAMMABLE 24 HR TIMER AND SETBACK THERMOSTAT. FURNISH COMPLETE WITH VENTING KIT.	TOYOTOMI LASER L-56 OR EQUAL

VENTILATION SYSTEM EQUIPMENT SCHEDULE

SYMBOL	SERVICE/FUNCTION	DESCRIPTION	MANUFACTURER/MODEL
EF-1 EF-2	EXHAUST FANS	DIRECT DRIVE 14"ø PROPELLER SIDEWALL EXHAUST FAN, 2,100 CFM AT 0.375" SP, 1,750 RPM. FURNISH WITH SPECIAL 1/2 HP, 115 V, 1 PH VARIGREEN MOTOR WITH OPTIONAL 0-10V LEADS.	GREENHECK SE1-14-436-VG (1/2 HP) OR EQUAL.

FUEL SYSTEM EQUIPMENT SCHEDULE

SYMBOL	SERVICE/FUNCTION	DESCRIPTION	MANUFACTURER/MODEL
P-DT1	DAY TANK FILL PUMP	ROTARY GEAR PUMP, 1/2" FPT INLET AND OUTLET, BRONZE CONSTRUCTION WITH SS SHAFTS, BUNA-N SEAL, CARBON BEARINGS, DIRECT FLEX COUPLED TO 1150 RPM ODP THERMALLY PROTECTED, AUTO RESET MOTOR, 1/2 HP, 115 V, 1 PH, 60 HZ, 6.6 GPM @ 20 PSID. PROVIDE WITH 40 PSID INTERNAL PRV.	OBERDORFER N994RH-J46
HP-DT	DAY TANK FILL HAND PUMP	DOUBLE ACTION PISTON HAND PUMP, ALUM HOUSING, SS PISTON SHAFT & LINER, BUNA-N SEALS, ANTI-SIPHONING VALVE.	GPI MODEL HP-100 OR EQUAL
SV-1	SOLENOID VALVE	DAY TANK 1" FLANGED SOLENOID VALVE.	MAGNATROL 18AR24-F1-24VDC OR EQUAL
AV-2 AV-3	DAY TANK FILL ACTUATED BALL VALVES	1" BALL VALVE FOR ACTUATOR - 360 IN-LB OPERATING TORQUE @ -50 DEG F. 120VAC NEMA 7 ACTUATOR - 600 IN-LBS TORQUE, 10 SECOND STROKE TIME, 0.50 LOCKED ROTOR AMPS.	NUTRON T3-R10R01LZ-06 VALVE WITH RCS SXR-1023 ACTUATOR
M-DT	DAY TANK FILL METER	1" INLET AND OUTLET FLANGES, WITH STRAINER, AIR ELIMINATOR, REGISTER, 100:1 PULSER, CONFIGURE FOR FLOW LEFT TO RIGHT.	TOTAL CONTROL SYSTEMS ASSEMBLY 682-15SP4AT3
G-DT	DAY TANK LEVEL GAUGE	MAGNETIC OPERATED SPIRAL GAUGE FOR #1 DIESEL, 25 PSIG MAX OPERATING PRESSURE, 35" LIQUID COLUMN PLUS 4" RISER.	ROCHESTER MODEL 8660 WITH SIDE-VIEW DIAL #5025S00570
F-AQ	DAY TANK FILL FILTER	AQUACON WATER BLOCKING FILTER.	HOUSING: VELCON VF-71E, ELEMENT: VELCON ACO-71801L
F-PM	ENGINE & HEATER FILTER	SINGLE ELEMENT PARTICULATE FILTER	HOUSING: RACOR 1000FGV, ELEMENT: RACOR 2020PM-OR

PIPE/TUBING STRUT CLAMP SCHEDULE

TUBE SIZE	CLAMP #	PIPE SIZE	CLAMP #
1/2" COPPER	BVT062	1/2" STEEL	B2008
3/4" COPPER	BVT087	3/4" STEEL	B2009
1" COPPER	BVT112	1" STEEL	B2010
1-1/4" COPPER	BVT125	1-1/4" STEEL	B2011
1-1/2" COPPER	BVT162	1-1/2" STEEL	B2012
2" COPPER	BVT212	2" STEEL	B2013
2-1/2" COPPER	BVT262	2-1/2" STEEL	B2014
3" COPPER	BVT312	3" STEEL	B2015
4" COPPER	BVT412	4" STEEL	B2017

NOTES:
1) ALL CLAMP NUMBERS ARE B-LINE. EQUIVALENT EQUALS ACCEPTABLE.
2) ALL COPPER TUBE CLAMPS TO BE CUSHIONED, VIBRA-CLAMP.
3) ALL STEEL PIPE CLAMPS NOT CUSHIONED.
4) USE STEEL CLAMPS FOR ALL STEEL PIPE AND RIGID CONDUIT.
5) SEE PLANS, ELEVATIONS, ISOMETRICS, ETC. FOR ACTUAL PIPE SIZES.

VALVE TAG SCHEDULE:

VALVE TAGS - 3"x5"x.08" ALUMINUM, 3/16" HOLES IN ALL FOUR CORNERS, BLACK GERBER THERMAL TRANSFER FILM PRINTED LETTERS ON GERBER 220 HIGH PERFORMANCE VINYL BACKGROUND, COLOR AS INDICATED, ONE SIDE ONLY. WARNING LITES OR EQUAL.

RED (DIESEL FUEL)

21 "NORMALLY OPEN, CLOSE ONLY FOR TEMPORARY MAINTENANCE OF ENGINE"
22 "ACTUATOR VALVE AV-2"
23 "ACTUATOR VALVE AV-3"
24 "NORMALLY CLOSED, OPEN ONLY TO FILL DAY TANK"
25 "NORMALLY CLOSED, OPEN ONLY FOR HAND PRIMING DAY TANK"
26 "NORMALLY OPEN, CLOSE ONLY FOR TEMPORARY MAINTENANCE OF DAY TANK & DEVICES"

GREEN (COOLING/ETHYLENE GLYCOL)

51 "NORMALLY CLOSED, OPEN ONLY FOR ADDING COOLANT - ETHYLENE GLYCOL ONLY"
52 not used
53 "LOW COOLANT LEVEL WARNING"
54 "ROOM LOW TEMPERATURE ALARM"

INSTALLATION - SECURE EACH TAG TIGHT TO VALVE, PIPE, OR DEVICE WITH STAINLESS STEEL CABLE TIES OR SAFETY WIRE THROUGH ALL FOUR CORNERS OR FASTEN TO ADJACENT WALL OR SECTION OF STRUT WITH SCREWS.

NOTES:
1) SEE PIPING PLANS, DIAGRAMS, & ISOMETRICS FOR TAG LOCATIONS.
2) FOR ALL VALVES NOT INDICATED WITH A SPECIFIC FUNCTION TAG PROVIDE 1-1/2"ø BRASS TAG LABELED "N.O." FOR NORMALLY OPEN VALVES AND 1"ø BRASS TAG LABELED "N.C." FOR NORMALLY CLOSED VALVES. SECURE TAGS TO VALVE OR ADJACENT PIPE WITH BEADED BRASS CHAIN.

SEQUENCE OF OPERATIONS

THE DAY TANK WILL HAVE MANUAL FILL CONTROLS WITH REDUNDANT HIGH AND LOW LEVEL ALARMS AND TIMERS. SEE AVEC CONTROL PANEL DRAWINGS FOR DETAILED SEQUENCE OF OPERATIONS.

COMBUSTION AIR INTAKE MOTORIZED DAMPERS WILL OPEN ANY TIME THERE IS AN ENGINE RUN SIGNAL FROM THE SWITCHGEAR. DAMPER MOTORS WILL BE NORMALLY CLOSED SPRING RETURN AND WILL CLOSE ON LOSS OF POWER IN LESS THAN 30 SECONDS.

EXHAUST MOTORIZED DAMPERS WILL OPEN ANY TIME ASSOCIATED EXHAUST FAN OPERATES. DAMPER MOTORS WILL BE NORMALLY CLOSED SPRING RETURN AND WILL CLOSE ON LOSS OF POWER IN LESS THAN 30 SECONDS.

EXHAUST FANS EF-1 AND EF-2 WILL OPERATE ON A CALL FOR COOLING THROUGH A 24VAC DIGITAL MODULATING THERMOSTAT. THE THERMOSTAT WILL PROVIDE A 0-10V SIGNAL TO MODULATE THE FAN SPEED AS REQUIRED TO MAINTAIN SPACE TEMPERATURE, 75F, ADJUSTABLE. THE ASSOCIATED EXHAUST DAMPERS WILL OPEN WHEN FAN RUNS.

OIL-FIRED SPACE HEATER OSH WILL OPERATE ON CALL FOR HEAT THROUGH ITS INTERNAL CONTROL PANEL TO MAINTAIN SPACE TEMPERATURE, 60F, ADJUSTABLE.

THE LOW TEMPERATURE ALARM HORN WILL SOUND WHEN THE TEMPERATURE INSIDE THE MODULE FALLS TO 40F, ADJUSTABLE.

THE RADIATOR FAN WILL OPERATE UNDER CONTROL OF THE TEMPERATURE CONTROLLER AS INDICATED IN THE ELECTRICAL CONTROL SCHEMATIC. WHEN THE COOLANT DISCHARGE TEMPERATURE RISES TO 200F (ADJUSTABLE), THE RADIATOR FAN WILL RUN. WHEN THE COOLANT DISCHARGE TEMPERATURE FALLS TO 195F (ADJUSTABLE), THE RADIATOR FAN WILL STOP.

SEE THE SWITCHGEAR SPECIFICATIONS FOR ENGINE-GENERATOR OPERATING SEQUENCE AND ALARMS.

NOTE:
ALL WORK ON THIS SHEET SHALL BE ADDITIVE ALTERNATIVE B.

ALASKA ENERGY AUTHORITY

STATE OF ALASKA 49TH BRIAN C. GRAY ME 8210 REGISTERED PROFESSIONAL ENGINEER

CRW ENGINEERING GROUP LLC
PHONE: (907) 562-3252
Gray Stassel Engineering, Inc.
PHONE: (907) 349-0100

TWIN HILLS, ALASKA
TWIN HILLS RPSU PROJECT
STANDBY MODULE MECHANICAL LEGEND, SCHEDULES, & SEQUENCE OF OPERATION

NO.	REVISION	BY	DATE
0	ISSUED FOR CONSTRUCTION	BCG	1/26/18

Plot Date 1/26/18
Designed BCG
Drawn JTD
Approved BCG

Sheet No.
M1.1

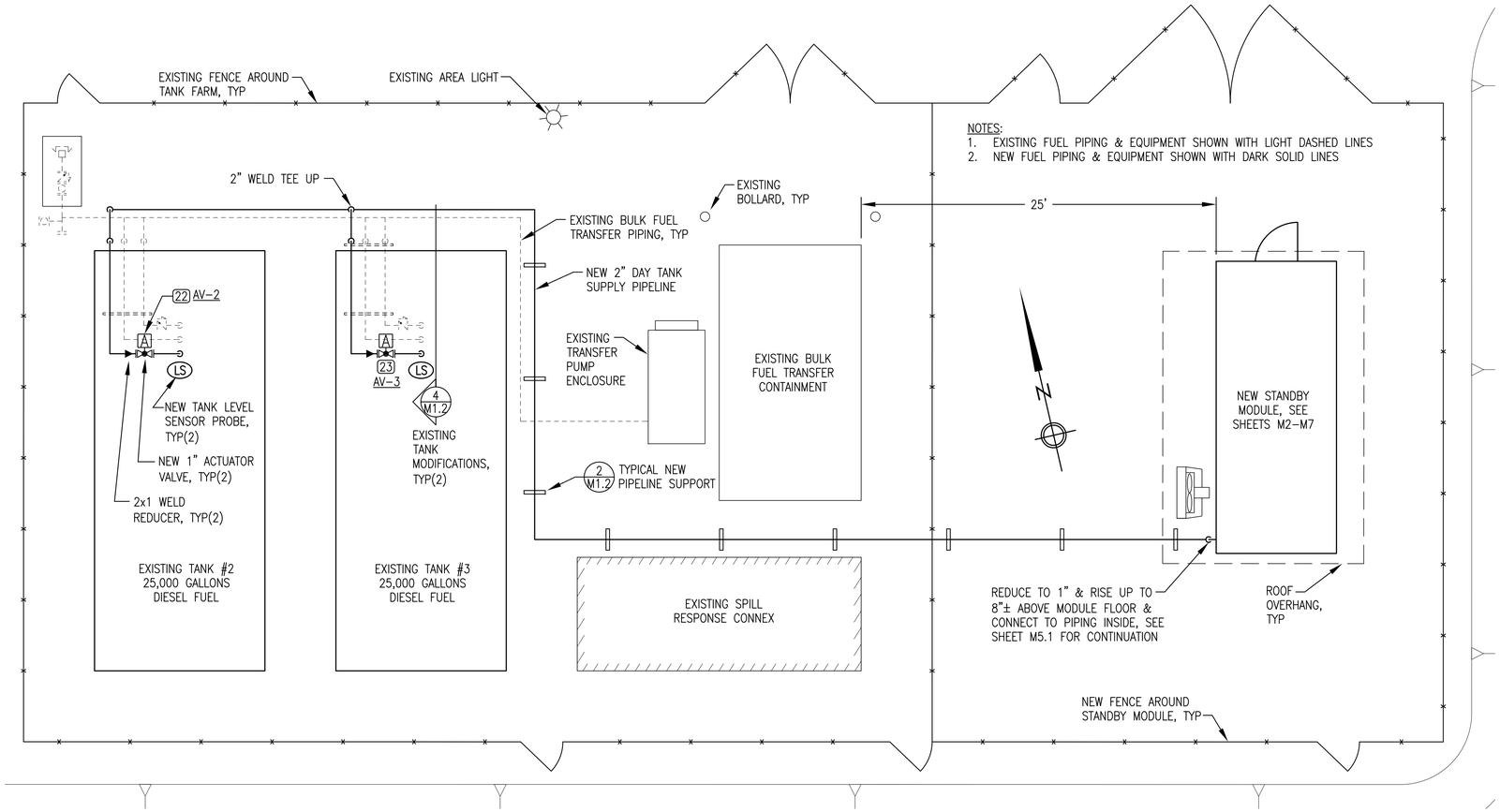

NOTES:
1. EXISTING FUEL PIPING & EQUIPMENT SHOWN WITH LIGHT DASHED LINES
2. NEW FUEL PIPING & EQUIPMENT SHOWN WITH DARK SOLID LINES

1 M1.2 STANDBY MODULE MECHANICAL SITE PLAN
1"=5'

NOTES:
1) INSTALL ALL PIPE SUPPORTS 8' ON CENTER MAX.
2) PROVIDE ADDITIONAL TREATED TIMBER BLOCKING AS REQUIRED TO MAINTAIN UNIFORM SLOPE. FASTEN LAYERS WITH 8" CERAMIC COATED WOOD SCREWS.
3) PIPE STRAP SIZED FOR ARCTIC PIPE ARE LARGER THAN PIPE O.D. TO ALLOW FOR EXPANSION AND MOVEMENT.

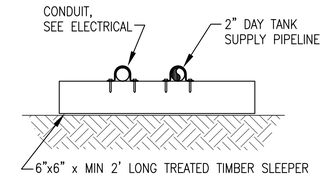

2 M1.2 TYPICAL PIPELINE SLEEPER SUPPORT
NO SCALE

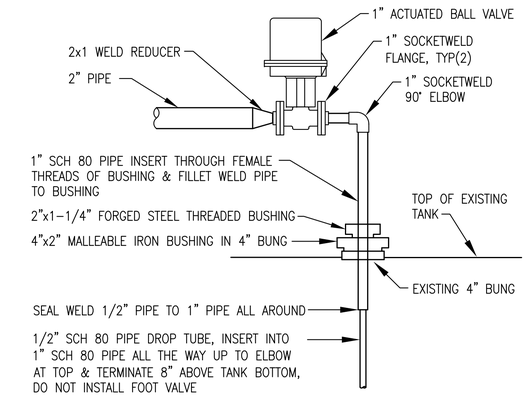

NOTE: PRESSURE TEST ENTIRE DROP TUBE ASSEMBLY PRIOR TO INSTALLING IN TANK.

3 M1.2 DAY TANK SUPPLY DROP TUBE
NO SCALE

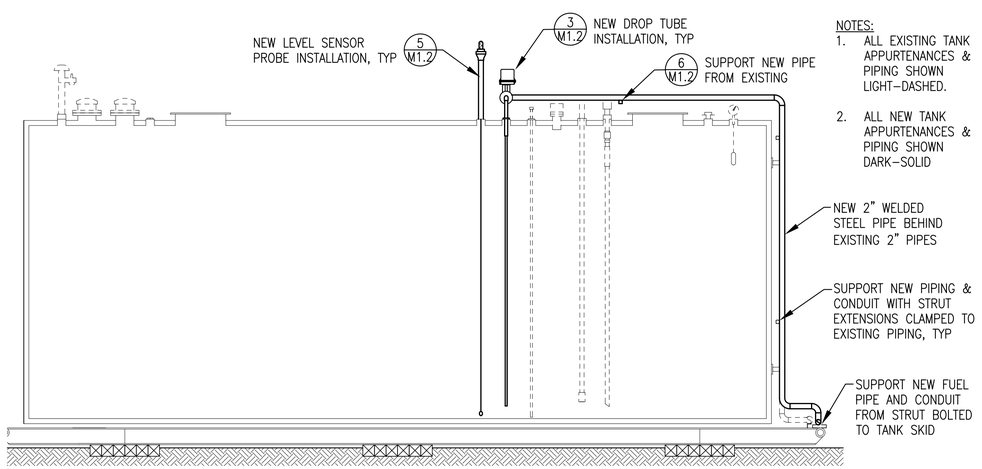

NOTES:
1. ALL EXISTING TANK APPURTENANCES & PIPING SHOWN LIGHT-DASHED.
2. ALL NEW TANK APPURTENANCES & PIPING SHOWN DARK-SOLID

4 M1.2 TYPICAL EXISTING TANK MODIFICATIONS
1"=3'

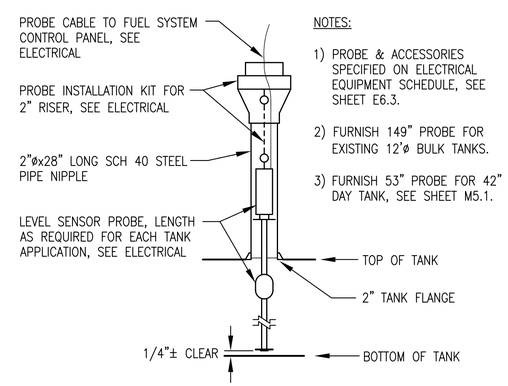

NOTES:
1) PROBE & ACCESSORIES SPECIFIED ON ELECTRICAL EQUIPMENT SCHEDULE, SEE SHEET E6.3.
2) FURNISH 149" PROBE FOR EXISTING 12'ø BULK TANKS.
3) FURNISH 53" PROBE FOR 42" DAY TANK, SEE SHEET M5.1.

5 M1.2 LEVEL SENSOR PROBE INSTALLATION
NO SCALE

NOTE:
ALL WORK ON THIS SHEET SHALL BE ADDITIVE ALTERNATE B.

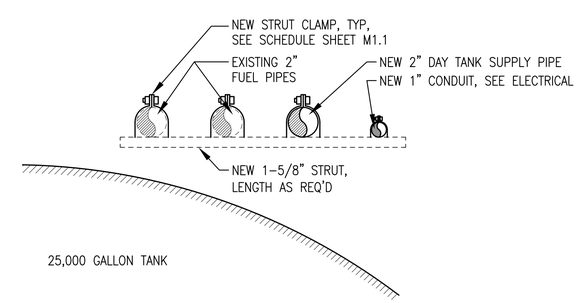

6 M1.2 PIPE/CONDUIT SUPPORT ON TOP OF TANK
NO SCALE

ALASKA ENERGY AUTHORITY

STATE OF ALASKA 49TH BRIAN C. CRW ME 8210 REGISTERED PROFESSIONAL ENGINEER

CRW ENGINEERING GROUP LLC PHONE: (907) 562-3252

Gray Stassel Engineering, Inc. PHONE: (907) 349-0100

TWIN HILLS, ALASKA
TWIN HILLS RPSU PROJECT

STANDBY MODULE
MECHANICAL SITE PLAN & DETAILS

NO.	REVISION	BY	DATE
0	ISSUED FOR CONSTRUCTION	BCG	1/26/18

Plot Date 1/26/18
Designed BCG
Drawn JTD
Approved BCG

Sheet No. M1.2

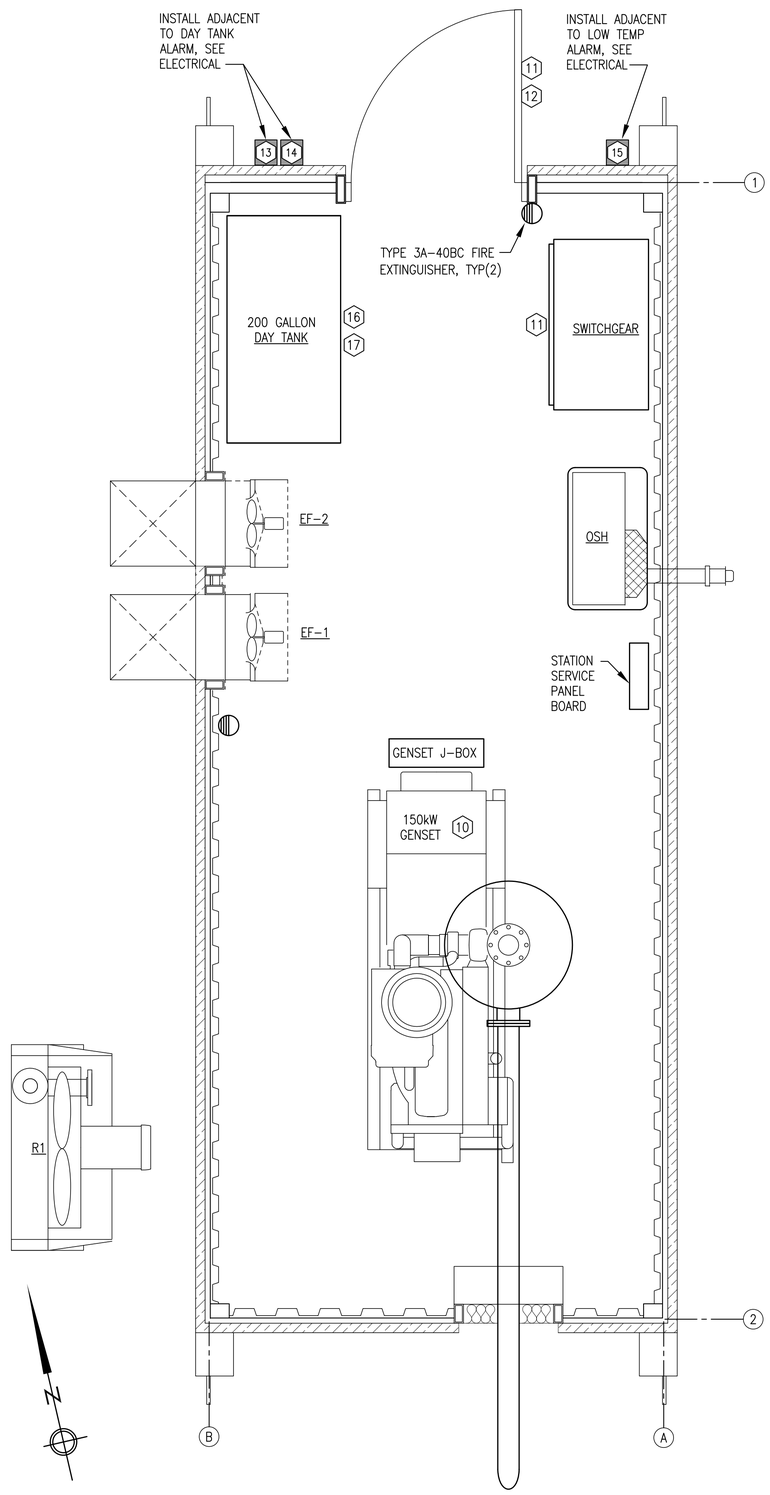

1 M1.3 FIRE EXTINGUISHER, WARNING SIGN & PLACARD PLAN
3/4" = 1'-0"

WARNING SIGN & INFORMATIONAL PLACARD SCHEDULE:

WARNING SIGNS & INFORMATIONAL PLACARDS – PROVIDE DECALS AND SIGN BOARDS AS INDICATED IN THE SCHEDULE BELOW, QUANTITY & LOCATION WHERE SHOWN ON THE WARNING SIGN/PLACARD PLAN THIS SHEET.

(#) DECALS – DECALS TO BE WHITE NON-REFLECTIVE VINYL BACKGROUND, 3M 3650-10, WITH 3M SERIES 225 HIGH PERFORMANCE VINYL LETTERS, ONE SIDE ONLY. WARNING LITES OR EQUAL. APPLY TO FACE OF DOORS OR ELECTRICAL ENCLOSURES WHERE INDICATED ACCORDING TO MANUFACTURER'S INSTRUCTIONS.

[#] BOARDS – SIGN BOARDS TO BE EQUAL TO DECALS EXCEPT MOUNTED ON 0.08" ALUMINUM PLATE, 10"x14" UNLESS INDICATED OTHERWISE OR REQUIRED TO BE LARGER FOR SPECIFIED LETTER SIZE. PROVIDE 3/16" HOLES IN ALL FOUR CORNERS. ATTACH TO CHAIN LINK FENCING WITH HOG RINGS OR STAINLESS STEEL TIES. ATTACH TO WALLS OR STRUCTURES WITH STAINLESS STEEL SCREWS OR BOLTS.

WARNING SIGNS – RED LETTERING ON WHITE BACKGROUND.

(10) "CAUTION: THIS UNIT STARTS AUTOMATICALLY, LOCK & TAG OUT PRIOR TO SERVICE"

(11) "DANGER HIGH VOLTAGE, AUTHORIZED PERSONNEL ONLY"

(12) "CAUTION HEARING & EYE PROTECTION REQUIRED"

[13] "FUEL OIL DAY TANK ALARM"

[14] "IN CASE OF SPILL CALL DEC 1-800-478-9300"

[15] "MODULE LOW TEMPERATURE ALARM"

INFORMATIONAL PLACARDS – BLACK LETTERING ON WHITE BACKGROUND.

(16) "CHECK DAY TANK ON EACH WALK THROUGH. FILL WHEN BELOW 3/4 LEVEL:
1) GO TO TANK FARM & CHECK LEVEL IN BULK FUEL TANKS
2) GO TO ACTUATED BALL VALVE SELECTOR SWITCH AT DAY TANK AND SELECT ACTUATED BALL VALVE FOR THE BULK TANK TO BE DRAWN FROM
3) OPEN MAIN FILL VALVE BY AQUACON FILTER
4) PRESS START BUTTON ON DAY TANK PANEL
5) MONITOR DAY TANK LEVEL CONTINUOUSLY
6) WHEN TANK REACHES FULL LEVEL PRESS STOP BUTTON
7) CLOSE DAY TANK MAIN FILL VALVE

(17) "TO MANUALLY FILL DAY TANK IN CASE OF EMERGENCY:
1) TURN OFF POWER TO THE DAY TANK CONTROL PANEL
2) MANUALLY OPEN ACTUATOR VALVE AT TANK FARM USING A WRENCH
3) OPEN MAIN FILL VALVE BY AQUACON FILTER
4) OPEN NORMALLY CLOSED VALVE BY HAND PUMP
5) OPERATE HAND PUMP WHILE MONITORING LEVEL GAUGE"

NOTE:
ALL WORK ON THIS SHEET SHALL BE ADDITIVE ALTERNATE B.

ALASKA ENERGY AUTHORITY

STATE OF ALASKA 49TH BRIAN C. GRAY ME 8210 REGISTERED PROFESSIONAL ENGINEER

CRW ENGINEERING GROUP LLC PHONE: (907) 562-3252

Gray Stassel Engineering, Inc. PHONE: (907) 349-0100

TWIN HILLS, ALASKA
TWIN HILLS RPSU PROJECT
STANDBY MODULE
STANDBY MODULE FIRE EXTINGUISHER, WARNING SIGN & INFORMATIONAL PLACARD PLAN

NO.	REVISION	BY	DATE
0	ISSUED FOR CONSTRUCTION	BCG	1/26/18

Plot Date 1/26/18
Designed BCG
Drawn JTD
Approved BCG

Sheet No. M1.3

GENERAL NOTES:

1) FABRICATE GENERATOR SUPPORTS FROM ASTM A36 CHANNEL AS SHOWN.

2) ALL CEILING-MOUNTED STRUT 12 GAUGE 1-5/8"x1-5/8" SOLID BACK PLAIN (UNFINISHED), B-LINE B22-PLN OR EQUAL. ALL WALL-MOUNTED STRUT 12 GAUGE 13/16"x1-5/8" SOLID BACK PLAIN (UNFINISHED) B-LINE B52-PLN. PURCHASE IN 20' LENGTHS TO MAKE CONTINUOUS RUNS.

3) MAKE ALL JOINTS WITH CONTINUOUS BUTT, GROOVE OR FILLET WELDS UNLESS SPECIFICALLY INDICATED OTHERWISE

3) INSTALL ALL SUPPORTS AND PENETRATIONS INDICATED AND GRIND SMOOTH PRIOR TO SANDBLASTING MODULE. SANDBLAST AND PAINT ALL SUPPORTS AND STEEL FRAMING THIS SHEET EQUIVALENT TO MODULE INTERIOR. SEE PAINTING SPECIFICATIONS.

4) TS LOCATION ON CEILING PLAN IS APPROXIMATE. MOVE TS TO CLOSEST FLAT BOTTOM SECTION OF CORRUGATION AS REQUIRED. THE DIMENSION SHOWN IS MINIMUM CLEARANCE FROM END WALL

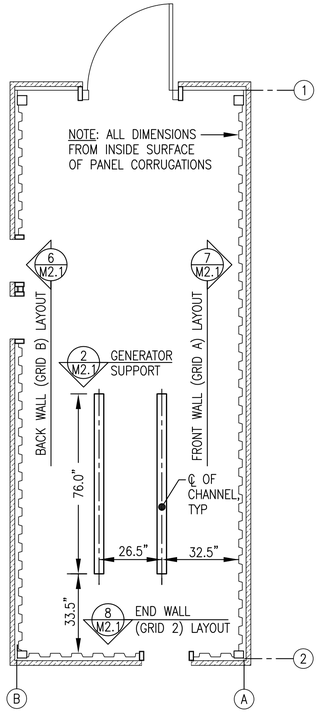

1 M2.1 FLOOR MECHANICAL SUPPORT PLAN
3/8"=1'-0"

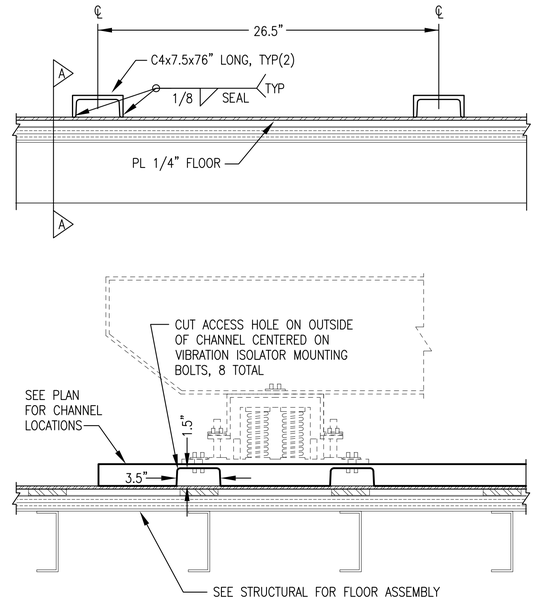

SECTION A-A, TYP(4 ENDS)

2 M2.1 GENERATOR SUPPORT FABRICATION
1"=6"

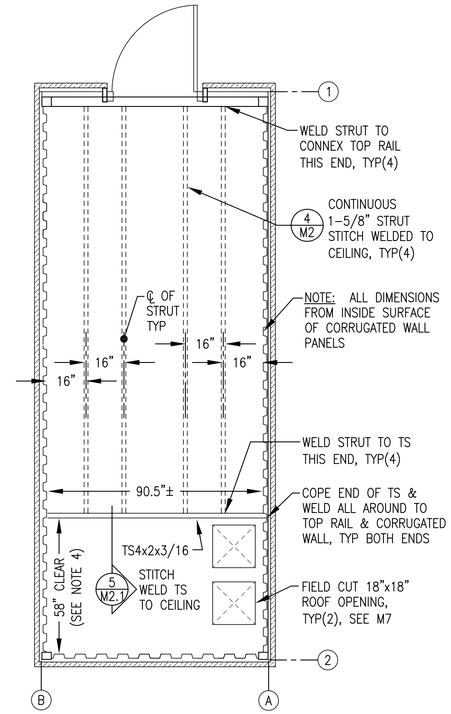

3 M2.1 CEILING MECHANICAL SUPPORT PLAN
3/8"=1'-0"

NOTE:
ALL WORK ON THIS SHEET SHALL BE ADDITIVE ALTERNATE B.

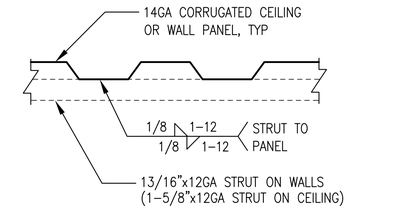

4 M2.1 STRUT ATTACHMENT TO CEILING/WALL
NO SCALE

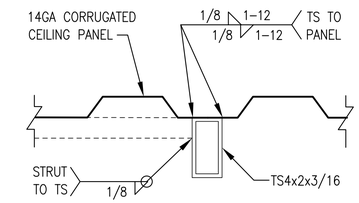

5 M2.1 TS ATTACHMENT TO CEILING
NO SCALE

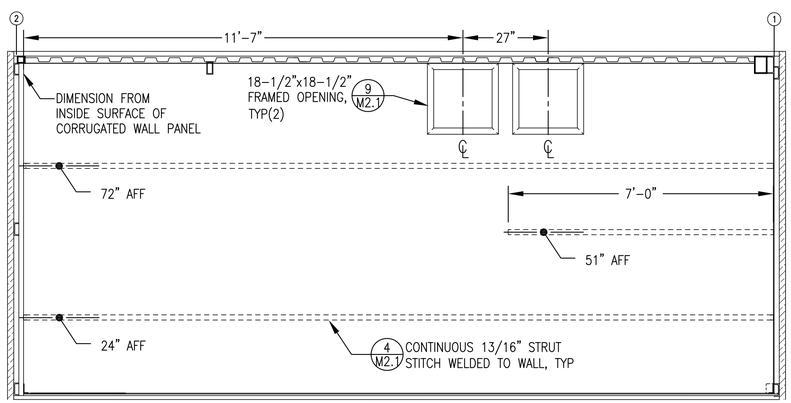

6 M2.1 BACK WALL (GRID B) LAYOUT
1/2"=1'-0"

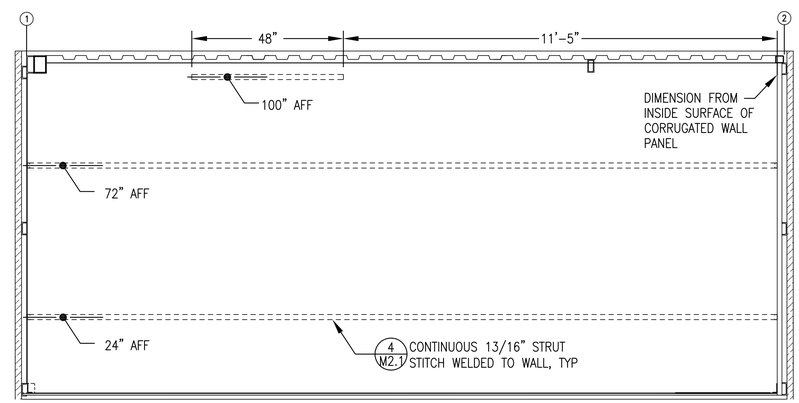

7 M2.1 FRONT WALL (GRID A) LAYOUT
1/2"=1'-0"

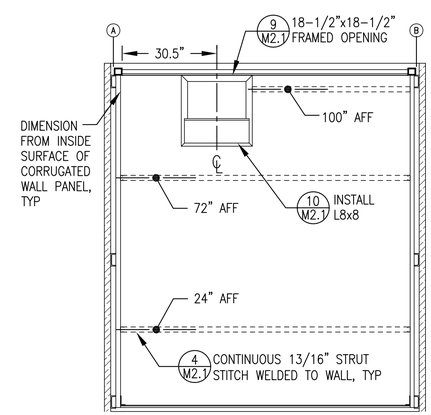

8 M2.1 END WALL (GRID 2) LAYOUT
1/2"=1'-0"

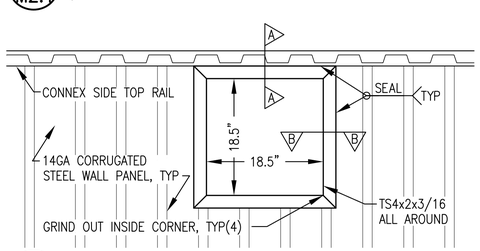

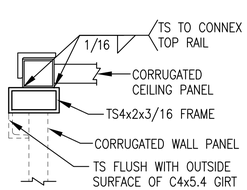

SECTION A-A

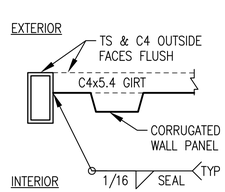

SECTION B-B

NOTES:

1) FABRICATE FRAMED OPENING WITH MITERED CORNERS AND FULL PENETRATION GROOVE WELDS.

2) FABRICATE TO FINISHED INSIDE (CLEAR) DIMENSIONS INDICATED ON ELEVATIONS.

3) GRIND OUT INSIDE OF MITERED CORNERS TO PROVIDE FULL CLEAR OPENING.

9 M2.1 TYPICAL FRAMED OPENING ELEVATION (VIEW FROM INTERIOR)
1"=1'-0"

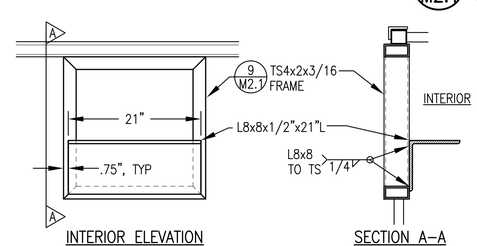

INTERIOR ELEVATION

SECTION A-A

10 M2.1 EXHAUST SUPPORT AT FRAMED OPENING
1"=1'-0"

ALASKA ENERGY AUTHORITY

STATE OF ALASKA 49TH BRIAN C. GRAY ME 8210 REGISTERED PROFESSIONAL ENGINEER

CRW ENGINEERING GROUP LLC
PHONE: (907) 562-3252

Gray Stassel Engineering, Inc.
PHONE: (907) 349-0100

TWIN HILLS, ALASKA
TWIN HILLS RPSU PROJECT

STANDBY MODULE
MECHANICAL SUPPORTS & PENETRATIONS

NO.	REVISION	BY	DATE
0	ISSUED FOR CONSTRUCTION	BCG	1/26/18

Plot Date 1/26/18
Designed BCG
Drawn JTD
Approved BCG

Sheet No.
M2.1

NOTE:
ALL WORK ON THIS SHEET SHALL BE ADDITIVE ALTERNATE B.

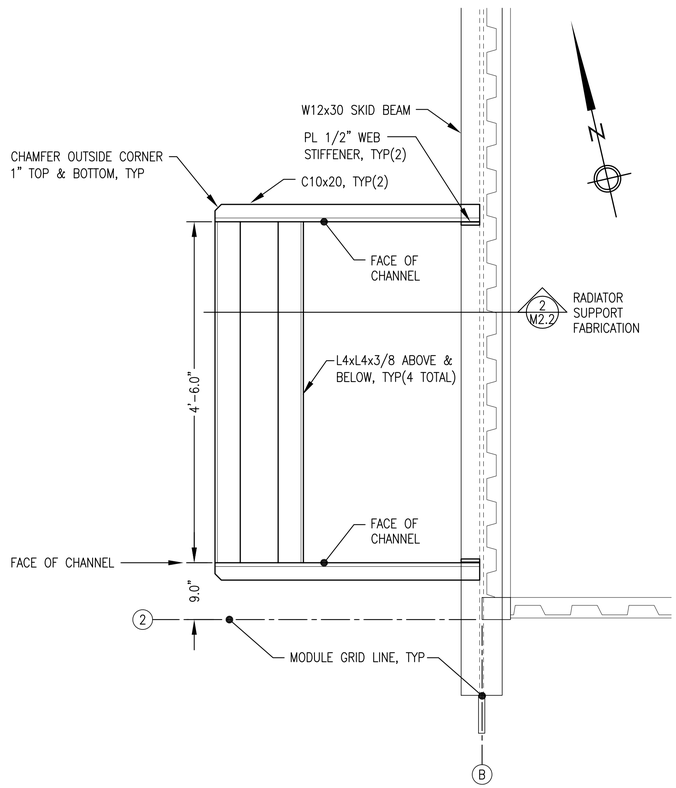

1 M2.2 RADIATOR SUPPORT PLAN
1/2"=1'-0"

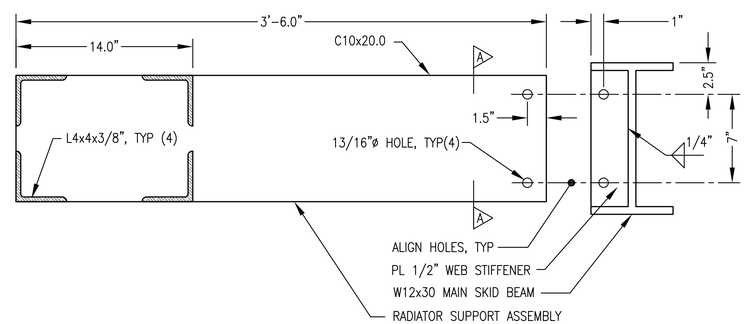

2 M2.2 RADIATOR SUPPORT FABRICATION
1"=6"

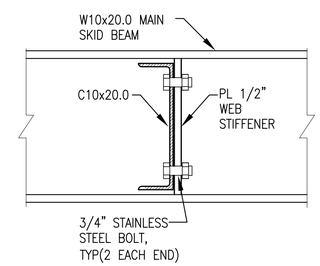

SECTION A–A

GENERAL NOTES:

1) FABRICATE SUPPORT FROM ASTM A36 ANGLE & CHANNEL AS SHOWN.

2) RACK ALL SUPPORT BRACKETS LEVEL & PERPENDICULAR TO SKID WITH CONNECTIONS BOLTED TIGHT PRIOR TO WELDING.

3) INSTALL ALL SUPPORTS INDICATED AND GRIND SMOOTH PRIOR TO SANDBLASTING MODULE. REMOVE SUPPORTS THEN SANDBLAST AND PAINT EQUIVALENT TO MODULE SKID. SEE PAINTING SPECIFICATIONS.

ALASKA ENERGY AUTHORITY

STATE OF ALASKA 49TH REGISTERED PROFESSIONAL ENGINEER BRIAN C. GRAY ME 8210

CRW ENGINEERING GROUP LLC PHONE: (907) 562-3252

Gray Stassel Engineering, Inc. PHONE: (907) 349-0100

TWIN HILLS, ALASKA
TWIN HILLS RPSU PROJECT

STANDBY MODULE
RADIATOR SUPPORT

NO.	REVISION	BY	DATE
0	ISSUED FOR CONSTRUCTION	BCG	1/26/18

Plot Date 1/26/18
Designed BCG
Drawn JTD
Approved BCG

Sheet No.
M2.2

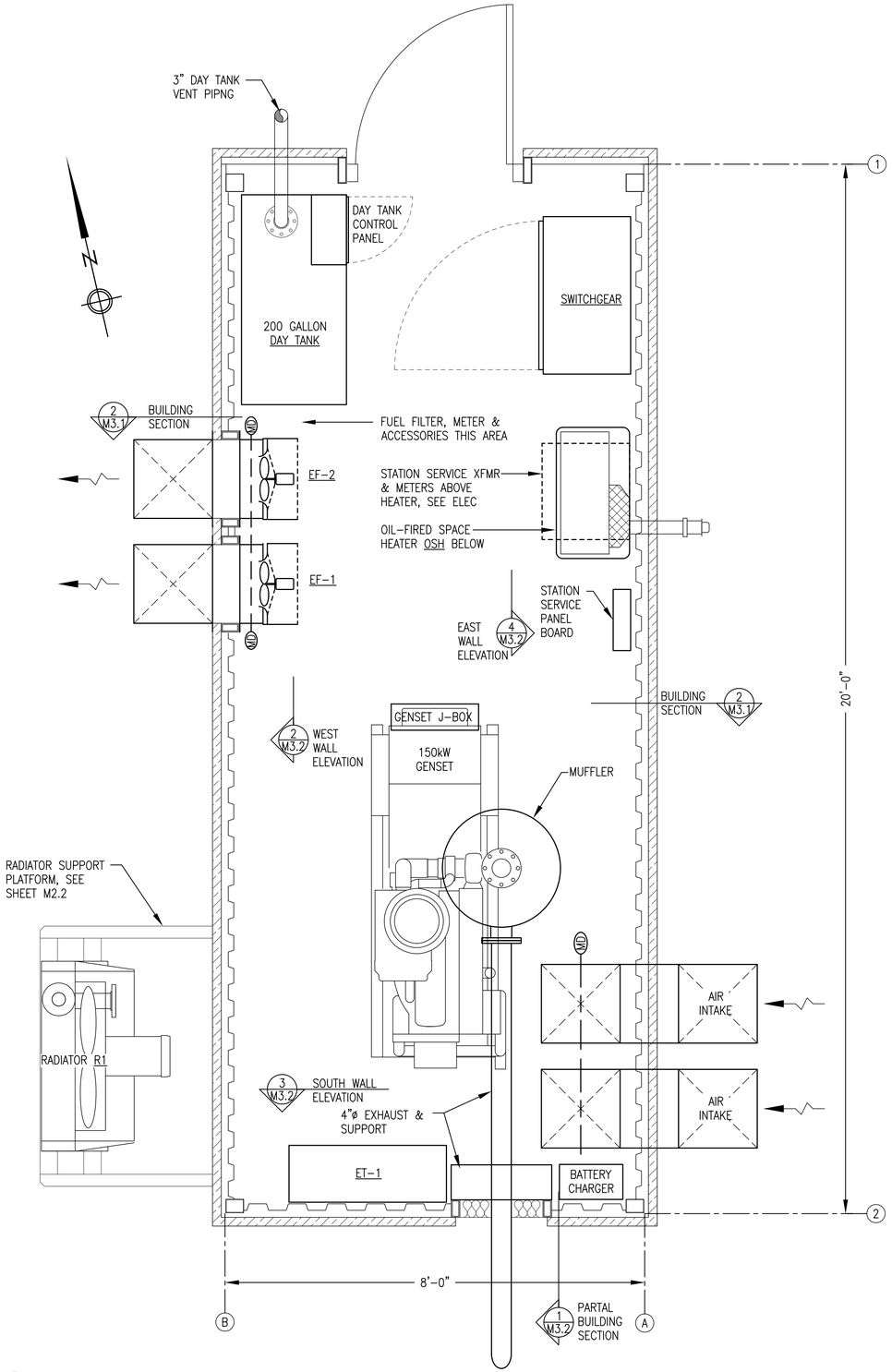

1 M3.1 EQUIPMENT LAYOUT PLAN
3/4"=1'-0"

NOTE:
ALL WORK ON THIS SHEET SHALL BE ADDITIVE ALTERNATE B.

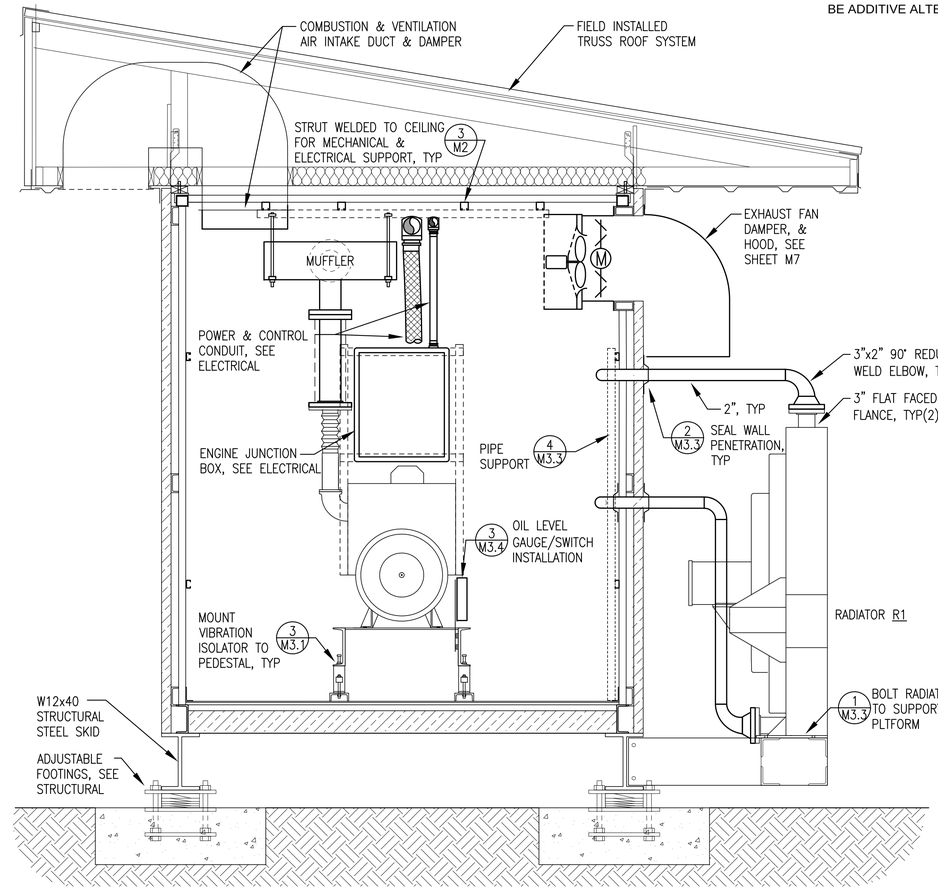

2 M3.1 BUILDING SECTION
3/4"=1'-0"

NOTE: CENTER ISOLATOR ON SUPPORT CHANNEL & VERIFY ENGINE EXHAUST RISER ALIGNMENT WITH SILENCER ABOVE PRIOR TO DRILLING CHANNEL. SEE SHEET M6 FOR SILENCER LOCATION.

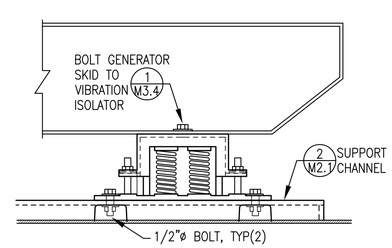

3 M3.1 GENERATOR VIBRATION ISOLATOR INSTALLATION
NO SCALE

ALASKA ENERGY AUTHORITY

STATE OF ALASKA 49TH BRIAN C. GRAY ME 8210 REGISTERED PROFESSIONAL ENGINEER

CRW ENGINEERING GROUP LLC
PHONE: (907) 562-3252

Gray Stassel Engineering, Inc.
PHONE: (907) 349-0100

TWIN HILLS, ALASKA
TWIN HILLS RPSU PROJECT

STANDBY MODULE
EQUIPMENT LAYOUT PLAN, SECTIONS & DETAILS

NO.	REVISION	BY	DATE
0	ISSUED FOR CONSTRUCTION	BCG	1/26/18

Plot Date 1/26/18
Designed BCG
Drawn JTD
Approved BCG

Sheet No.
M3.1

GENERAL NOTES:

1. ALL STRUT LAYOUT DIMENSIONS ARE APPROXIMATE. ADJUST FINAL LOCATIONS AS REQUIRED FOR PIPING AND EQUIPMENT SUPPORT.
2. ALL VERTICAL STRUT SHOWN IS 1-5/8" x 74" LONG UNLESS SPECIFICALLY INDICATED OTHERWISE.
3. FASTEN VERTICAL STRUT TO SHOP WELDED HORIZONTAL STRUT BEHIND WITH 1/2"x3/4" ALLEN HEAD CAP SCREWS. SEE DETAIL 4/M3.3.
4. ONLY MAJOR EQUIPMENT SUPPORT STRUT SHOWN THIS SHEET. PROVIDE ADDITIONAL STRUT AS REQUIRED AND AS SHOWN ON OTHER MECHANICAL AND ELECTRICAL DRAWINGS.

NOTE:
ALL WORK ON THIS SHEET SHALL BE ADDITIVE ALTERNATE B.

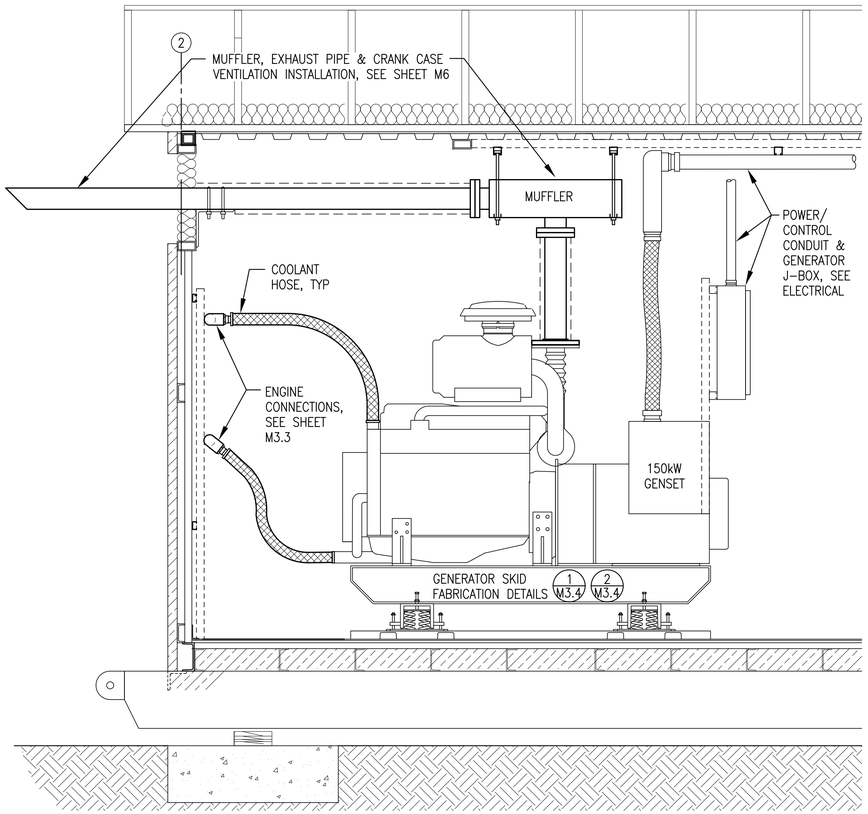

1/M3.2 PARTIAL BUILDING SECTION
3/4"=1'-0"

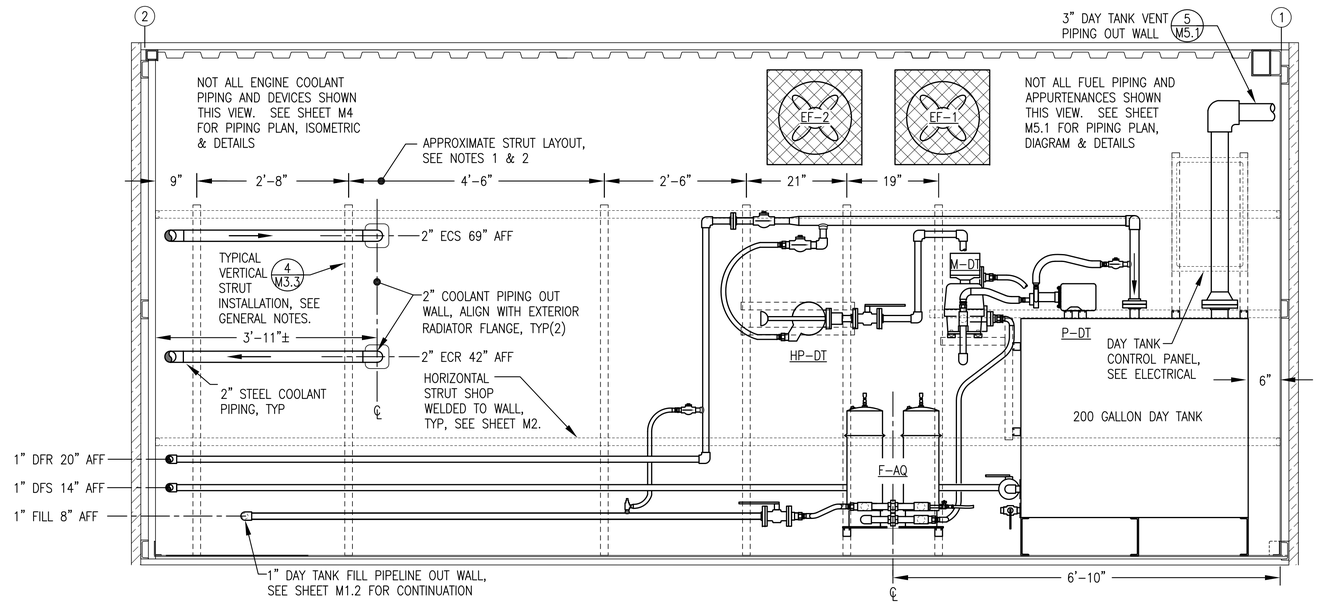

2/M3.2 INTERIOR WEST WALL ELEVATION
3/4"=1'-0"

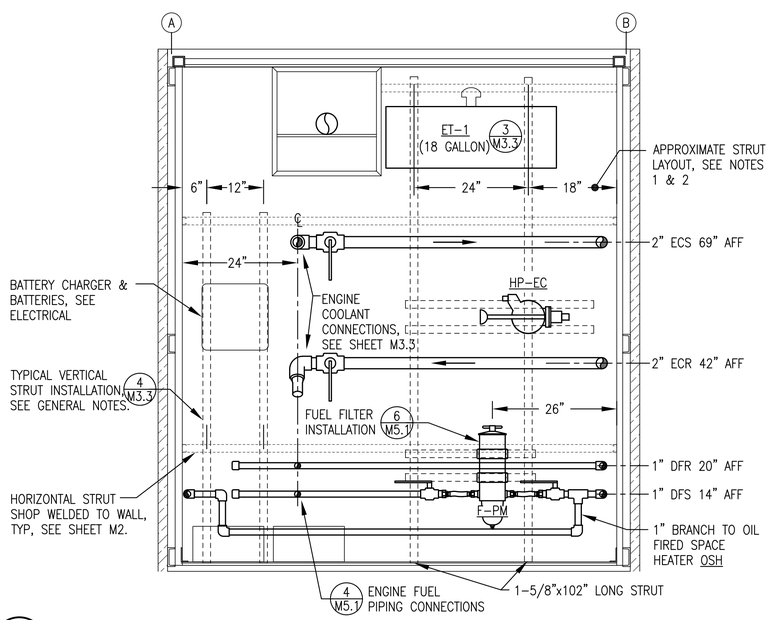

3/M3.2 INTERIOR SOUTH WALL ELEVATION
3/4"=1'-0"

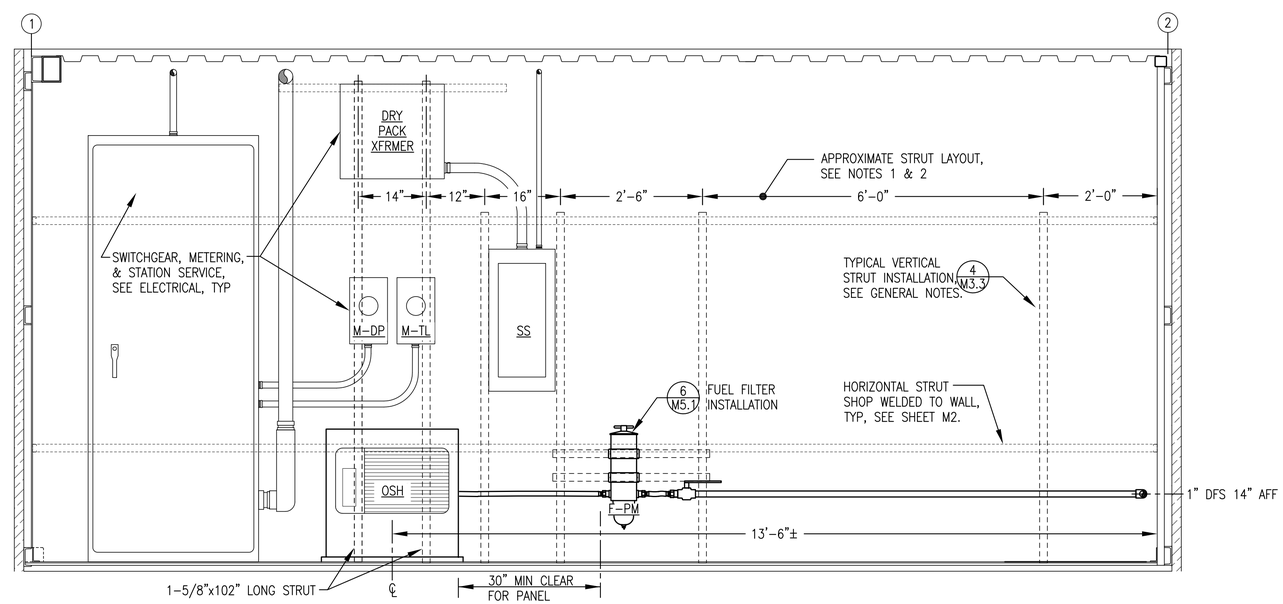

4/M3.2 INTERIOR EAST WALL ELEVATION
3/4"=1'-0"

ALASKA ENERGY AUTHORITY

STATE OF ALASKA 49TH BRIAN C. CROSS ME 8210 REGISTERED PROFESSIONAL ENGINEER

CRW ENGINEERING GROUP LLC
PHONE: (907) 562-3252

Gray Stassel Engineering, Inc.
PHONE: (907) 349-0100

TWIN HILLS, ALASKA
TWIN HILLS RPSU PROJECT
STANDBY MODULE
SECTIONS, ELEVATIONS, & DETAILS

NO.	REVISION	BY	DATE
0	ISSUED FOR CONSTRUCTION	BCG	1/26/18

Plot Date 1/26/18
Designed BCG
Drawn JTD
Approved BCG

Sheet No.
M3.2

NOTE:
ALL WORK ON THIS SHEET SHALL BE ADDITIVE ALTERNATE B.

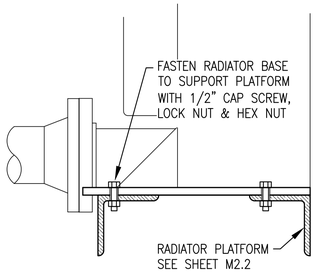

1 M3.3 RADIATOR ANCHOR DETAIL
NO SCALE

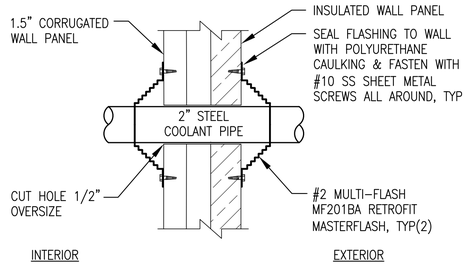

2 M3.3 COOLANT PIPE WALL PENETRATION
NO SCALE

EXPANSION TANK	TANK LENGTH "L"	TANK CAPACITY
ET-1	36"	18 GALLONS

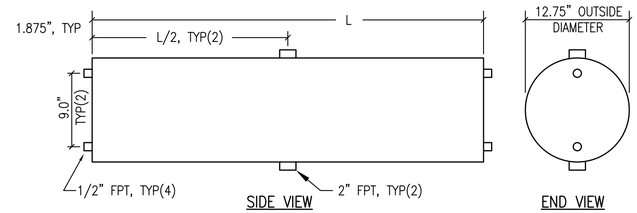

3 M3.3 GLYCOL EXPANSION TANK FABRICATION
1"=6"

EXPANSION TANK GENERAL NOTES:

1) FABRICATE SINGLE WALL NOMINAL CAPACITY GLYCOL EXPANSION TANK, SEE TABLE FOR CAPACITIES.

2) FABRICATE SHELL FROM MINIMUM 10 GAUGE ASTM A-36 PLATE STEEL ROLLED AND WELDED OR SCHEDULE 5 LIGHTWALL ASTM A53 STEEL PIPE. FABRICATE HEADS FROM 3/16" THICK ASTM A-36 PLATE STEEL. MAKE ALL JOINTS WITH CONTINUOUS FULL-PENETRATION WELDS.

3) PROVIDE WITH ALL OPENINGS INDICATED USING MINIMUM 3000# FORGED STEEL PIPE HALF COUPLINGS IN ACCORDANCE WITH U.L 142 FIGURE 7.1 #2.

4) PRESSURE TEST COMPLETED ASSEMBLY TO 15 PSIG MINIMUM.

5) UPON COMPLETION OF FABRICATION, ROUND ALL CORNERS AND SHARP EDGES. SANDBLAST TANK EXTERIOR AND ALL ATTACHMENTS IN ACCORDANCE WITH SSPC-SP-6. PRIME AND COVER WITH TWO COATS OF EPOXY, SHERWIN WILLIAMS MACROPOXY 646, NO SUBSTITUTES, COLOR STRUCTURAL GRAY 4031.

6) UPON COMPLETION FLUSH INTERIOR OF TANK TO REMOVE ALL DIRT AND DEBRIS, AIR DRY INTERIOR, AND SEAL ALL TANK OPENINGS WITH PLASTIC PLUGS.

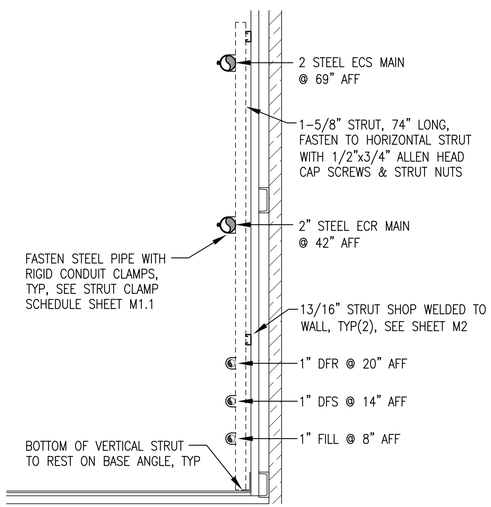

4 M3.3 TYPICAL PIPE SUPPORT AT BACK WALL
1"=1'-0"

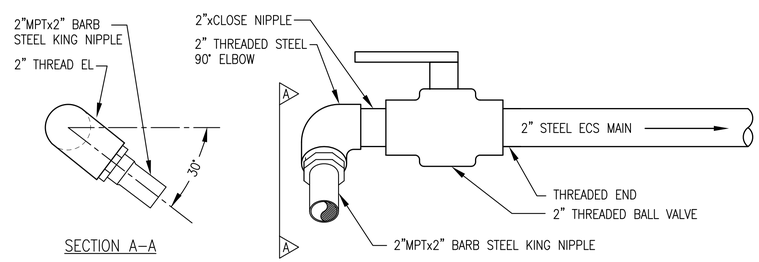

NOTES:
1) MAIN PIPING 2" STEEL WITH 1" INSULATION. ALL BRANCH PIPING NOT INSULATED.

2) ALL PIPING SCHEDULE 40 STEEL. ALL LINE SIZE VALVES THREADED.

5 M3.3 GENERATOR DISCHARGE CONNECTION
NO SCALE

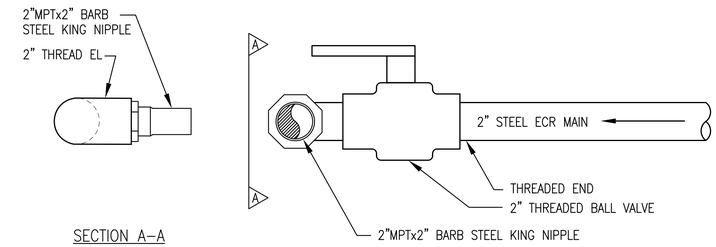

NOTES:
1) MAIN PIPING 2" STEEL WITH 1" INSULATION. ALL BRANCH PIPING NOT INSULATED.

2) ALL PIPING SCHEDULE 40 STEEL. ALL LINE SIZE VALVES THREADED.

6 M3.3 GENERATOR SUCTION CONNECTION
NO SCALE

ALASKA ENERGY AUTHORITY

STATE OF ALASKA 49TH BRIAN C. GRAY ME 8210 REGISTERED PROFESSIONAL ENGINEER

CRW ENGINEERING GROUP LLC PHONE: (907) 562-3252
Gray Stassel Engineering, Inc. PHONE: (907) 349-0100

TWIN HILLS, ALASKA
TWIN HILLS RPSU PROJECT
STANDBY MODULE MECHANICAL DETAILS

NO.	REVISION	BY	DATE
0	ISSUED FOR CONSTRUCTION	BCG	1/26/18

Plot Date 1/26/18
Designed BCG
Drawn JTD
Approved BCG

Sheet No. M3.3

NOTE:
ALL WORK ON THIS SHEET SHALL BE ADDITIVE ALTERNATE B.

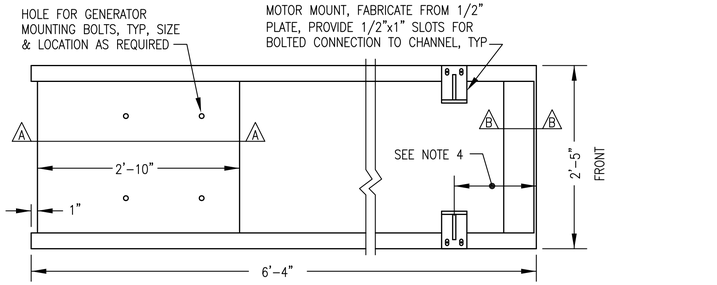

PLAN (TOP) VIEW

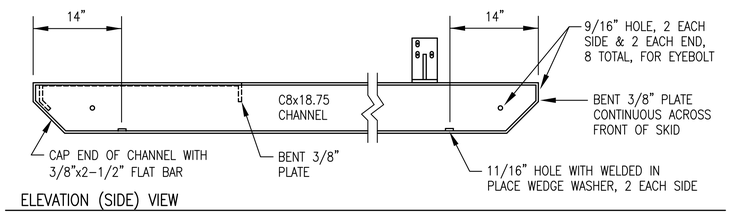

ELEVATION (SIDE) VIEW

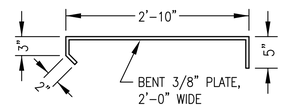

SECTION A-A

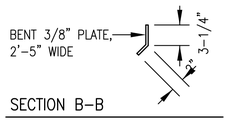

SECTION B-B

NOTES:

1) FABRICATE FROM ASTM A-36 STEEL. BEND PLATES & CUT ENDS OF CHANNELS AT 90° & 45° AS SHOWN.
2) EXCEPT WHERE INDICATED AS BOLTED MAKE ALL CONNECTIONS WITH CONTINUOUS WELDS (FILLET OR FULL-PENETRATION GROOVE AS REQUIRED) IN ACCORDANCE WITH CURRENT AWS STANDARD CODE.
3) ROUND ALL CORNERS & GRIND WELDS SMOOTH AFTER FABRICATION. PAINT TO MATCH ENGINE-GENERATOR.
4) PLACE ENGINE ON SKID SO THAT THE CENTERLINE OF THE EXHAUST RISER IS 3'-7.5" FROM THE FRONT OF THE SKID.

1 / M3.4 GENERATOR SKID FABRICATION

NO SCALE

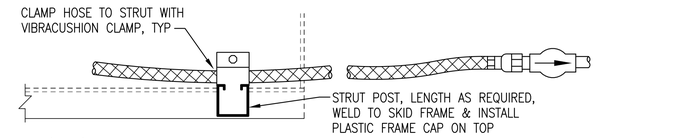

PLAN (TOP) VIEW

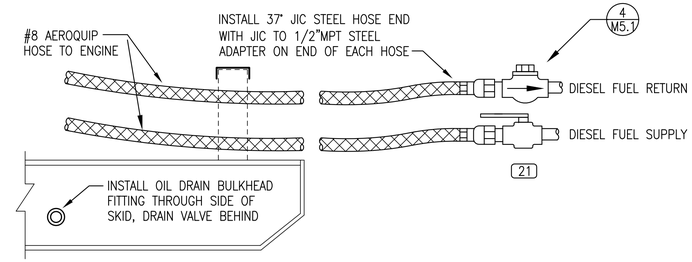

ELEVATION (SIDE) VIEW

2 / M3.4 GENERATOR SKID FUEL HOSE TERMINATIONS & OIL DRAIN

NO SCALE

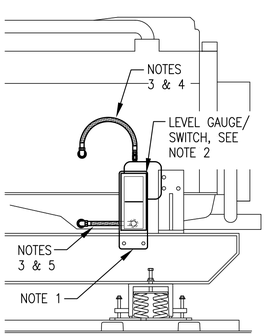

NOTES:

1) 1/4" STEEL SUPPORT PLATE PRE-DRILLED TO MATCH GAUGE/SWITCH MOUNTS, CHANNEL SKID HOLES AND BOTTOM HOSE ENTRANCE. BOLT TO INSIDE (BACK) OF CHANNEL SKID AT HEIGHT AS REQUIRED TO CENTER GAUGE AT NORMAL FULL OIL LEVEL. ADJUST SWITCH CONTACTS 1/2" ABOVE & BELOW.
2) MOUNT OIL LEVEL GAUGE/SWITCH TO STEEL SUPPORT PLATE WITH RUBBER SHOCK MOUNTS .
3) #8 HOSE WITH 1/2" OR 3/8" NPT JIC SWIVEL ENDS AS REQUIRED.
4) CONNECT TOP (VENT) PORT TO ENGINE CRANK CASE WITH HOSE. ROUTE UPPER HOSE TO AVOID LOW POINT TRAPS.
5) CONNECT BOTTOM PORT TO ENGINE OIL PAN WITH HOSE. DO NOT TEE INTO OIL DRAIN LINE. ROUTE LOWER HOSE BACK THROUGH PRE-DRILLED HOLE IN STEEL PLATE.

3 / M3.4 TYPICAL OIL LEVEL GAUGE/SWITCH INSTALLATION

NO SCALE

ALASKA ENERGY AUTHORITY

STATE OF ALASKA 49TH BRIAN C. GRAY ME 8210 REGISTERED PROFESSIONAL ENGINEER

CRW ENGINEERING GROUP LLC PHONE: (907) 562-3252

Gray Stassel Engineering, Inc. PHONE: (907) 349-0100

TWIN HILLS, ALASKA
TWIN HILLS RPSU PROJECT

STANDBY MODULE
GENERATOR DETAILS

NO.	REVISION	BY	DATE
0	ISSUED FOR CONSTRUCTION	BCG	1/26/18

Plot Date 1/26/18
Designed BCG
Drawn JTD
Approved BCG

Sheet No.
M3.4

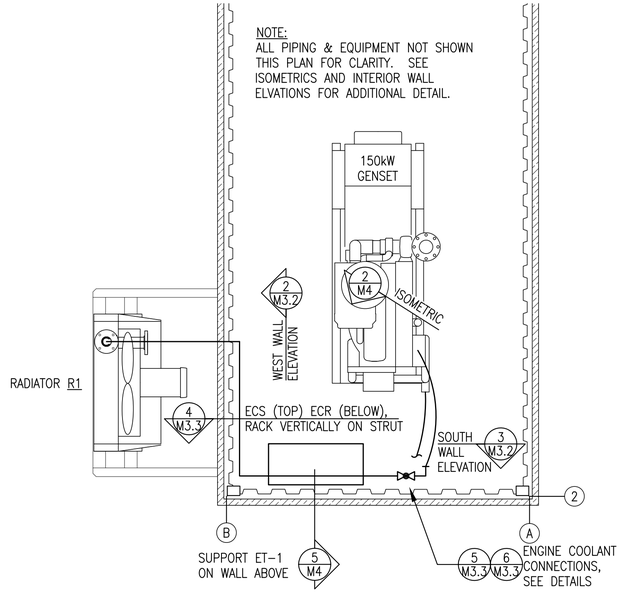

1 M4 COOLANT PIPING PLAN

3/8"=1'-0"

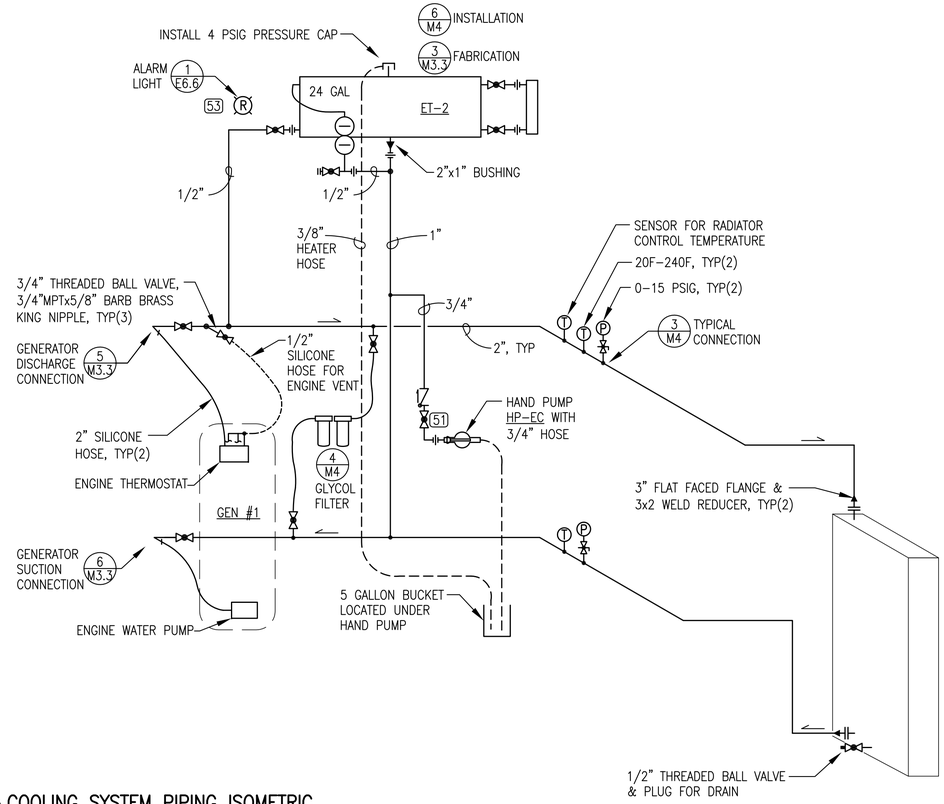

2 M4 COOLING SYSTEM PIPING ISOMETRIC

NO SCALE

ISOMETRIC NOTES:

1) ALL PIPING SHOWN THIS ISOMETRIC 2" SCH 40 STEEL WITH WELDED JOINTS UNLESS SPECIFICALLY INDICATED OTHERWISE. ALL FLANGES ANSI 150# PATTERN.
2) UNLESS INDICATED OTHERWISE MAKE ALL CONNECTIONS TO STEEL MAINS FOR INSTRUMENTATION WITH 3/4" THREAD-O-LET, SEE DETAIL 3/M4.
3) UNLESS INDICATED OTHERWISE MAKE ALL CONNECTIONS TO STEEL MAINS FOR VENTS, BRANCHES AND BLEED LINES WITH BRANCH SIZE SOCK-O-LETS OF STUBBED-IN HALF NIPPLES.
4) UPON COMPLETION OF FABRICATION FLUSH INTERIOR OF PIPING TO REMOVE ALL DEBRIS AND RESIDUE.
5) INSULATE COOLANT PIPING MAINS FROM GENERATOR VALVES TO WALL PENETRATIONS. ALL OTHER PIPING NOT INSULATED. PAINT ALL UNINSULATED PIPE & FITTINGS.
6) ALL VALVES NORMALLY OPEN EXCEPT FOR DRAIN VALVES & THOSE VALVES SPECIFICALLY INDICATED N.C.
7) SEE INSTRUMENTATION SCHEDULE SHEET E1 FOR TEMPERATURE SENSORS, PRESSURE SENSORS, COOLANT LEVEL SWITCHES, ETC.

NOTES:

1) FOR MAINS SMALLER THAN 3" OR FOR EXTRA LONG INSERTION WELLS INSTALL 3/4" CLOSE NIPPLE & COUPLING TO LIMIT WELL INSERTION DEPTH INTO MAIN.
2) TEMPERATURE SENSOR INSTALLATION SIMILAR TO THERMOMETER EXCEPT USE 3/4"x1/2" BUSHING.

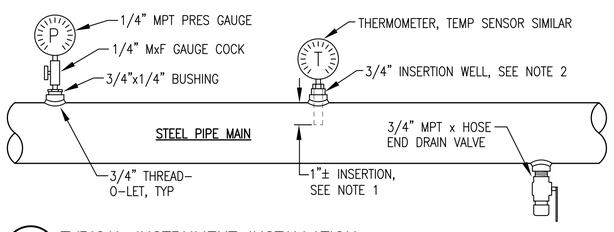

3 M4 TYPICAL INSTRUMENT INSTALLATION

NO SCALE

NOTE:
ALL WORK ON THIS SHEET SHALL BE ADDITIVE ALTERNATE B.

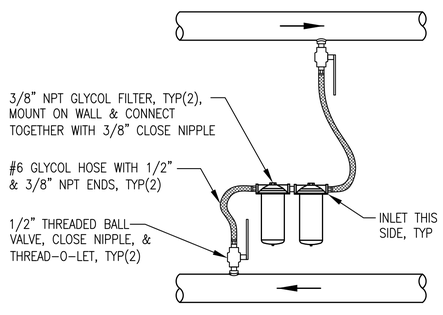

4 M4 GLYCOL FILTER INSTALLATION

NO SCALE

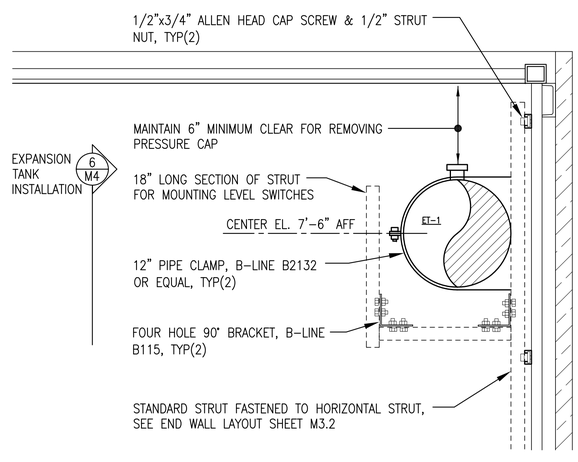

5 M4 EXPANSION TANK SUPPORT

NO SCALE

NOTE: SEE DETAIL 3/M3.3 FOR TANK FABRICATION AND DETAIL 5/M4 FOR TANK SUPPORT.

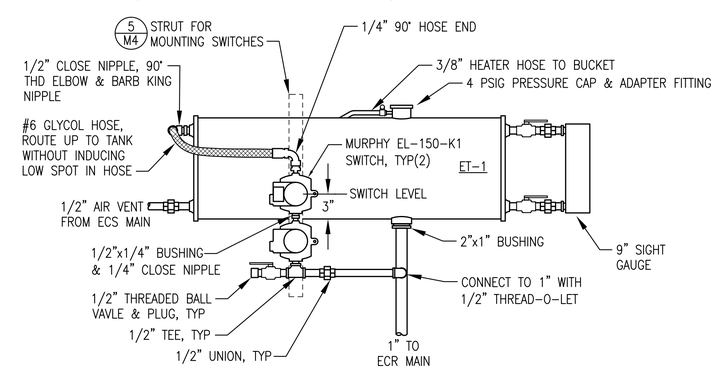

6 M4 EXPANSION TANK INSTALLATION

NO SCALE

ALASKA ENERGY AUTHORITY

STATE OF ALASKA 49TH BRIAN C. COLLINS ME 8210 REGISTERED PROFESSIONAL ENGINEER

CRW ENGINEERING GROUP LLC PHONE: (907) 562-3252

Gray Stassel Engineering, Inc. PHONE: (907) 349-0100

TWIN HILLS, ALASKA
TWIN HILLS RPSU PROJECT

STANDBY MODULE COOLANT PIPING

NO.	REVISION	BY	DATE
0	ISSUED FOR CONSTRUCTION	BCG	1/26/18

Plot Date 1/26/18
Designed BCG
Drawn JTD
Approved BCG

Sheet No. M4

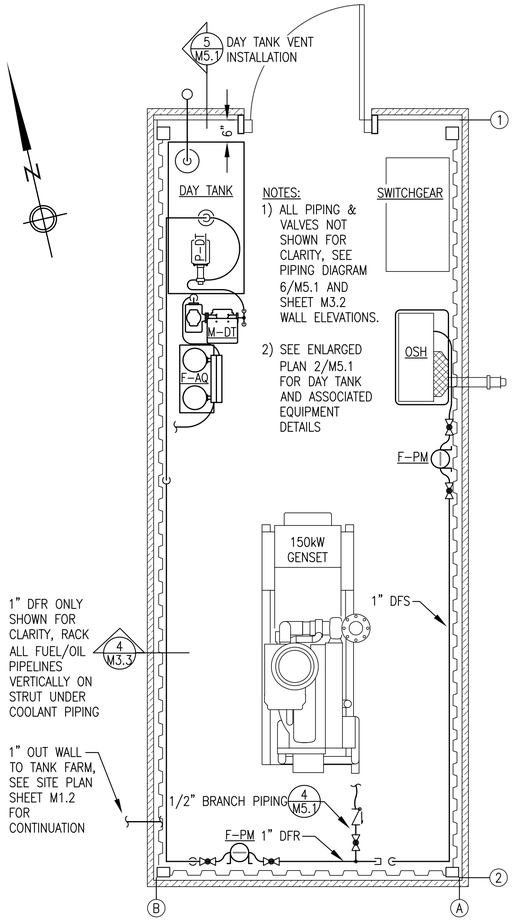

NOTES:
1) ALL PIPING & VALVES NOT SHOWN FOR CLARITY, SEE PIPING DIAGRAM 6/M5.1 AND SHEET M3.2 WALL ELEVATIONS.
2) SEE ENLARGED PLAN 2/M5.1 FOR DAY TANK AND ASSOCIATED EQUIPMENT DETAILS

1 M5.1 FUEL SYSTEM PIPING PLAN
1/2"=1'-0"

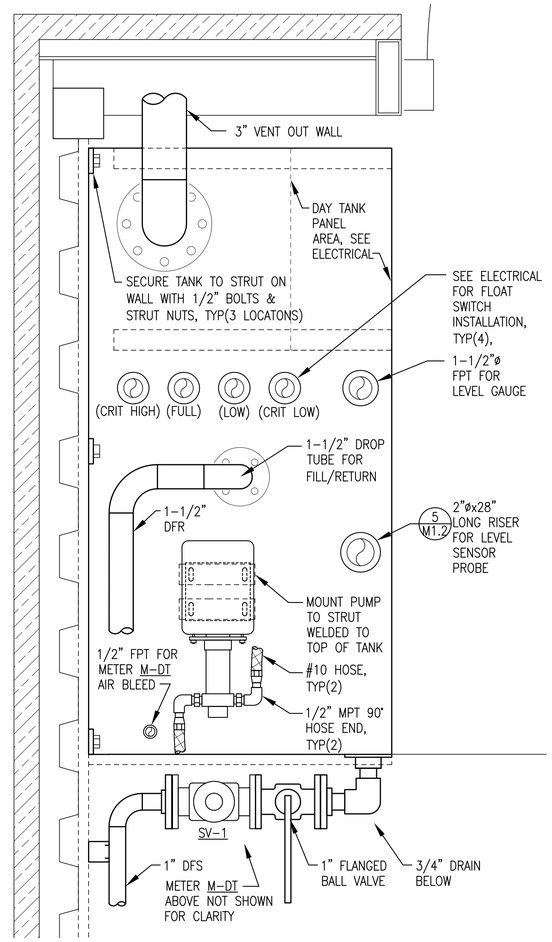

2 M5.1 DAY TANK ENLARGED PLAN
2"=1'-0"

NOTE:
ALL WORK ON THIS SHEET SHALL BE ADDITIVE ALTERNATE B.

3 M5.1 NOT USED
NO SCALE

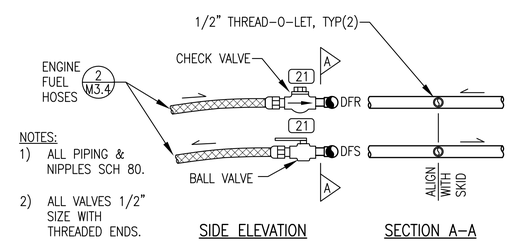

NOTES:
1) ALL PIPING & NIPPLES SCH 80.
2) ALL VALVES 1/2" SIZE WITH THREADED ENDS.

4 M5.1 ENGINE FUEL PIPING CONNECTION
NO SCALE

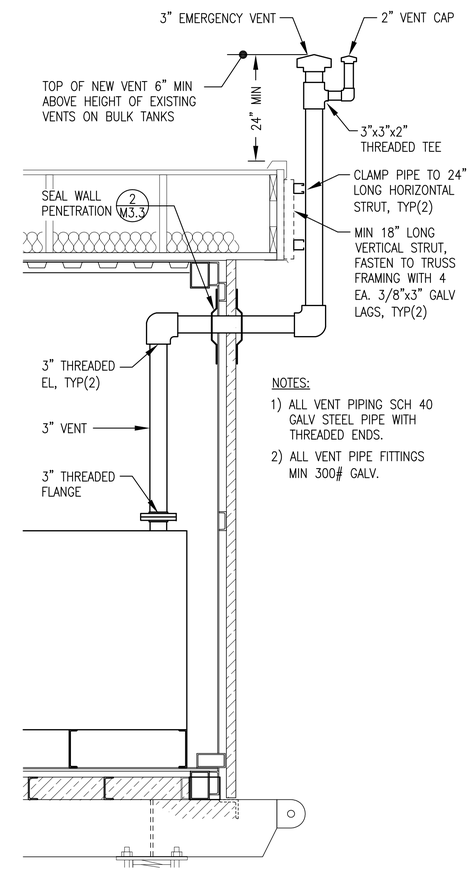

NOTES:
1) ALL VENT PIPING SCH 40 GALV STEEL PIPE WITH THREADED ENDS.
2) ALL VENT PIPE FITTINGS MIN 300# GALV.

5 M5.1 DAY TANK VENT INSTALLATION
NO SCALE

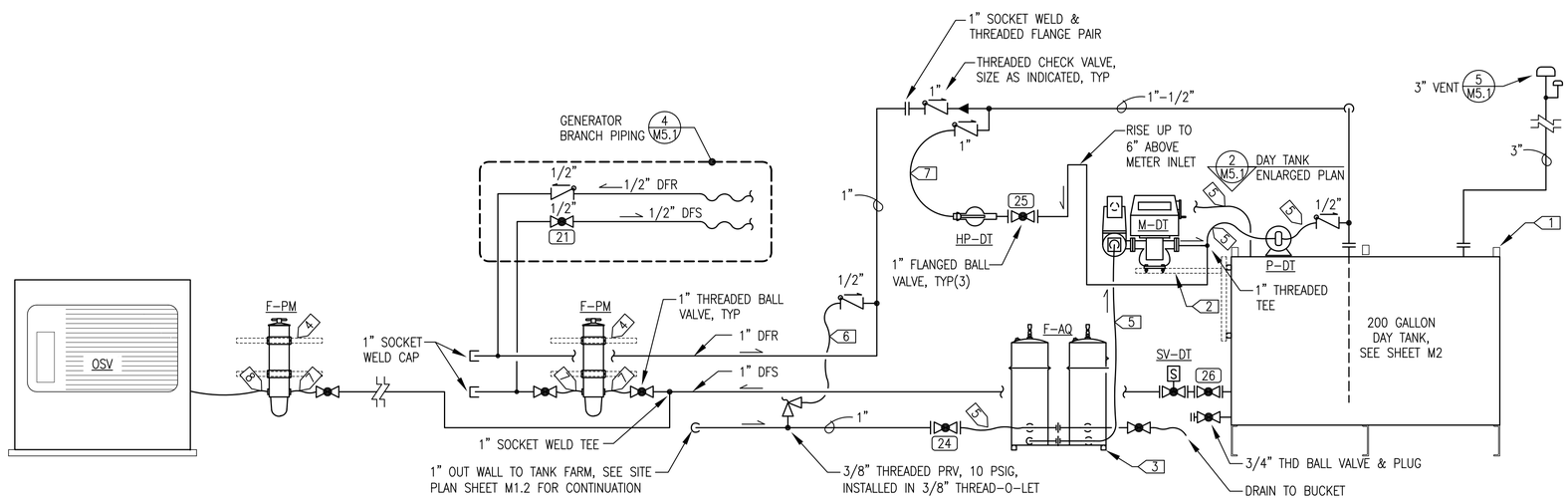

6 M5.1 FUEL SYSTEM PIPING DIAGRAM
NO SCALE

PIPING DIAGRAM GENERAL NOTES:

1) SEE SHEET M5.2 FOR DAY TANK FABRICATION DETAILS. PLUG/CAP ALL SPARE OPENINGS.
2) SEE DIESEL FUEL EQUIPMENT SCHEDULE SHEET M1.1 FOR EQUIPMENT DESCRIPTIONS.
3) ALL FUEL PIPING SCH 80 BLACK STEEL. ALL VENT PIPING SCH 40 GALV. STEEL,
4) ALL 1-1/2" & LARGER PIPE JOINTS BUTT WELD EXCEPT VENT PIPING THREADED. ALL 1" & SMALLER PIPE JOINTS SOCKET WELD EXCEPT THREADED FOR VALVES & CONNECTIONS TO EQUIPMENT AS REQUIRED. NO THREADED JOINTS ON EXTERIOR OF BUILDING EXCEPT FOR VENT PIPING.

PIPING DIAGRAM SPECIFIC NOTES:

1 PLACE DAY TANK HARD AGAINST WALL BEHIND & FASTEN TO HORIZONTAL WALL STRUT WITH 1/2" BOLTS & STRUT NUTS.

2 SUPPORT METER M-DT FROM SHOP-MOUNTED TANK STRUT WITH VERTICAL STRUT AND 2 EACH 12" LONG RIGHT ANGLE BRACKETS. SEE WALL ELEVATION.

3 SUPPORT FILTER BANK F-AQ FROM WALL WITH VERTICAL STRUT AND 2 EACH 12" LONG RIGHT ANGLE BRACKETS. SEE WALL ELEVATION.

4 SUPPORT FILTER F-PM FROM WALL WITH HORIZONTAL STRUT. SEE WALL ELEVATIONS.

5 #10 HOSE WITH JIC BY 1/2", 3/4", OR 1" NPT ENDS AS REQUIRED.

6 #8 HOSE WITH JIC BY 3/8" OR 1/2" NPT ENDS AS REQUIRED.

7 #10 HOSE WITH JIC BY 1" NPT END, CONNECT TO FILTER WITH 7/8" UNF END.

8 #8 HOSE WITH JIC BY 3/8" NPT END, CONNECT TO FILTER WITH 7/8" UNF END.

ALASKA ENERGY AUTHORITY

STATE OF ALASKA 49TH BRIAN C. GRAY ME 8210 REGISTERED PROFESSIONAL ENGINEER

CRW ENGINEERING GROUP LLC PHONE: (907) 562-3252

Gray Stassel Engineering, Inc. PHONE: (907) 349-0100

TWIN HILLS, ALASKA
TWIN HILLS RPSU PROJECT

STANDBY MODULE
FUEL PIPING PLAN & DETAILS

NO.	REVISION	BY	DATE
0	ISSUED FOR CONSTRUCTION	BCG	1/26/18

Plot Date 1/26/18
Designed BCG
Drawn JTD
Approved BCG

Sheet No.
M5.1

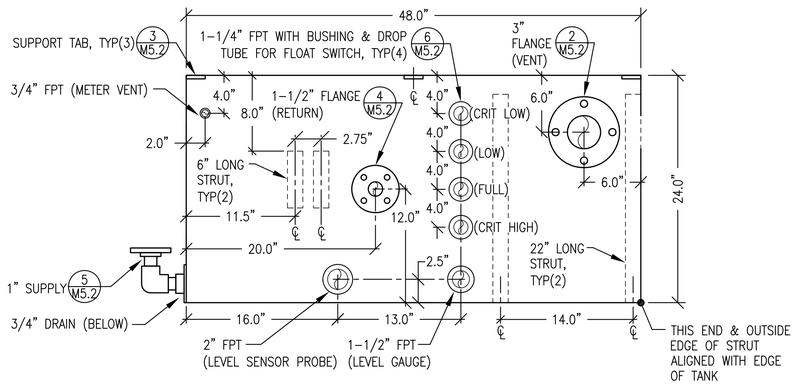

PLAN VIEW – TOP

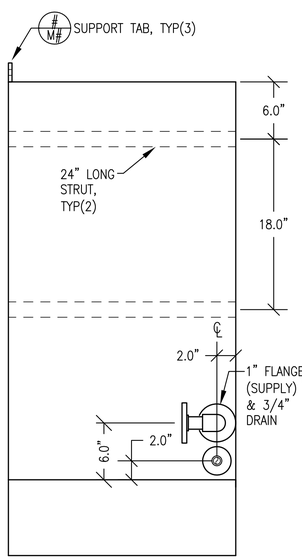

LEFT END ELEVATION

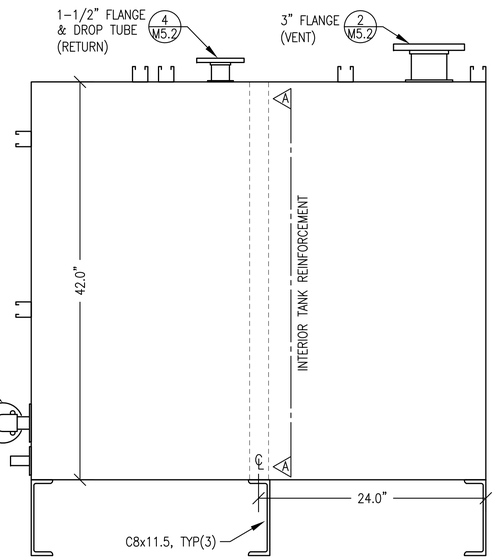

FRONT ELEVATION

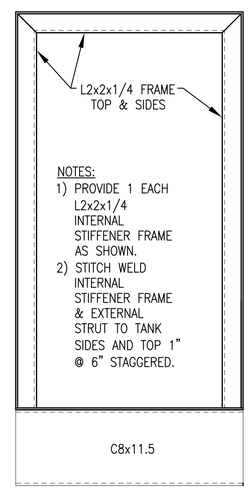

SECTION A–A

NOTES:

1) FABRICATE SINGLE WALL 200 GALLON NOMINAL CAPACITY GENERATOR RUNNING TANK IN ACCORDANCE WITH UL 142.

2) FABRICATE FROM ASTM A–36 STEEL PLATE, 10 GAUGE MINIMUM EXCEPT FOR TOP 3/16" MINIMUM. ALL TANK SEAM JOINTS TO BE FULL CONTINUOUS WELDS IN ACCORDANCE WITH UL 142 FIGURE 6.5 – #1, #6, #7, OR #8.

3) PROVIDE WITH ALL OPENINGS AND ATTACHMENTS INDICATED. ALL STRUT TO BE 1–5/8"x1–5/8"x12 GA SOLID BACK PLAIN (BLACK), B–LINE B22 PLN OR EQUAL. SEAL WELD ALL TANK ATTACHMENTS.

4) INSTALL ALL FPT OPENINGS IN ACCORDANCE WITH UL 142 FIGURE 7.1 – #4 UNLESS INDICATED OTHERWISE. ALL DROP TUBES SCH 80 ASTM A53 STEEL PIPE WITH MPT END AS INDICATED.

5) UPON COMPLETION OF FABRICATION, ROUND ALL CORNERS AND SHARP EDGES. SANDBLAST TANK EXTERIOR AND ALL ATTACHMENTS IN ACCORDANCE WITH SSPC–SP–6. PRIME AND COVER WITH TWO COATS OF EPOXY, SHERWIN WILLIAMS MACROPOXY 646, NO SUBSTITUTES, COLOR STRUCTURAL GRAY 4031.

6) LABEL ALL TANK CONNECTIONS WITH DESCRIPTION SHOWN IN PARENTHESES USING MINIMUM 1/4" BLACK LETTERS.

7) PRIOR TO SHIPPING, CLEAN TO REMOVE DUST AND DEBRIS, SEAL NPT TANK OPENINGS WITH PLASTIC OR STEEL PIPE PLUGS/CAPS AND BLIND ALL FLANGED CONNECTIONS.

1 M5.2 DAY TANK PLAN, ELEVATIONS, & SECTION
NO SCALE

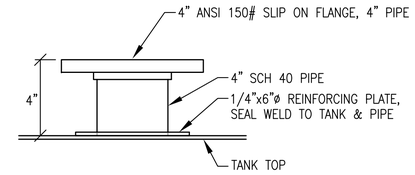

2 M5.2 4" FLANGED VENT DETAIL
NO SCALE

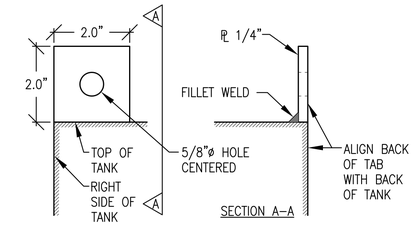

NOTE: PROVIDE ONE TAB AT LEFT SIDE OF TANK (AS SHOWN), ONE IN CENTER AND ONE AT RIGHT SIDE.

3 M5.2 TYPICAL TANK MOUNTING TAB DETAIL
NO SCALE

NOTE:
ALL WORK ON THIS SHEET SHALL BE ADDITIVE ALTERNATE B.

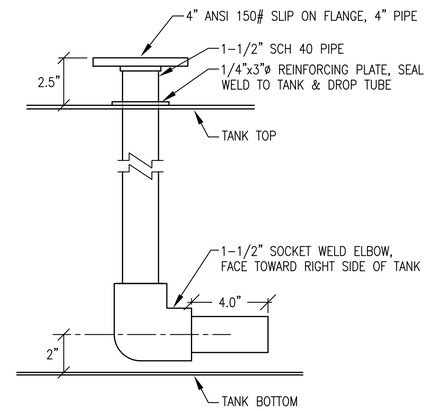

4 M5.2 1-1/2" FLANGED RETURN DETAIL
NO SCALE

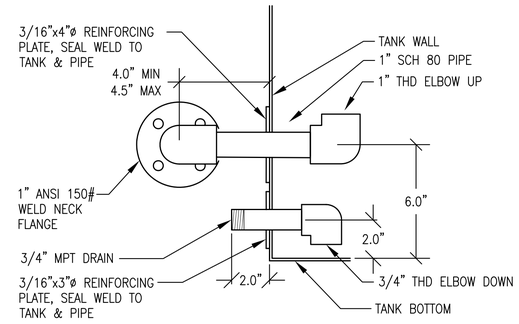

5 M5.2 1" FLANGED SUPPLY & 3/4" DRAIN DETAIL
NO SCALE

NOTE: TANK FABRICATION INSTALLATION SHOWN. SEE ELECTRICAL FOR FIELD INSTALLATION OF FLOAT SWITCH.

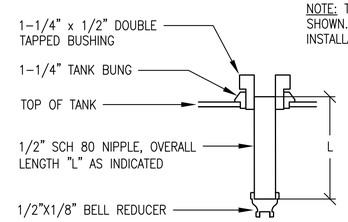

NIPPLE LENGTH "L"

CRITICAL HIGH L=CLOSE

FULL L=4" (85% FULL)

LOW L=18" (50% FULL)

CRITICAL LOW L=20" (45% FULL)

6 M5.2 FLOAT SWITCH INSTALLATION
NO SCALE

ALASKA ENERGY AUTHORITY

STATE OF ALASKA 49TH BRIAN C. GRAY ME 8210 REGISTERED PROFESSIONAL ENGINEER

CRW ENGINEERING GROUP LLC PHONE: (907) 562-3252

Gray Stassel Engineering, Inc. PHONE: (907) 349-0100

TWIN HILLS, ALASKA
TWIN HILLS RPSU PROJECT

STANDBY MODULE
FUEL OIL DAY TANK FABRICATION

NO.	REVISION	BY	DATE
0	ISSUED FOR CONSTRUCTION	BCG	1/26/18

Plot Date 1/26/18
Designed BCG
Drawn JTD
Approved BCG

Sheet No. M5.2

NOTE:
ALL WORK ON THIS SHEET SHALL BE ADDITIVE ALTERNATE B.

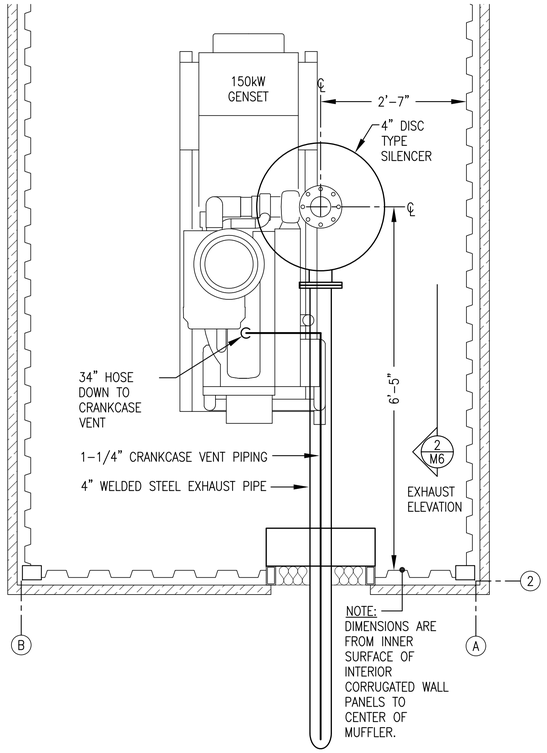

1 M6 EXHAUST & CRANK VENT PLAN
3/4"=1'-0"

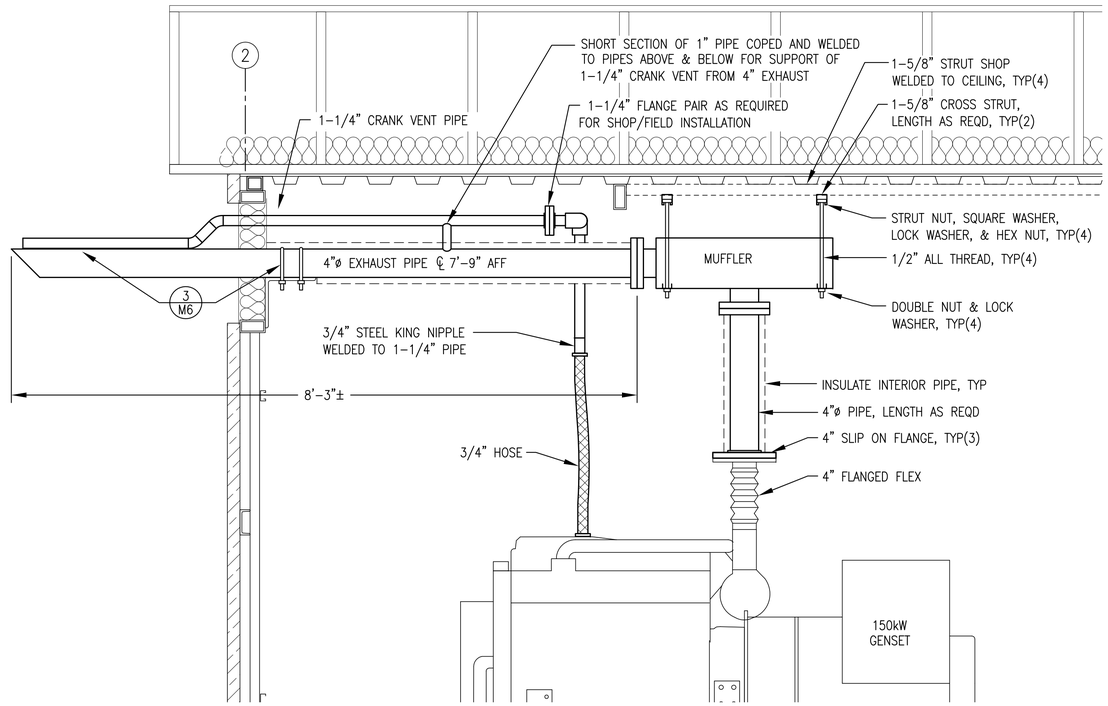

2 M6 GENERATOR #1 SILENCER, EXHAUST & CRANK VENT PIPE INSTALLATION
1"=1'-0"

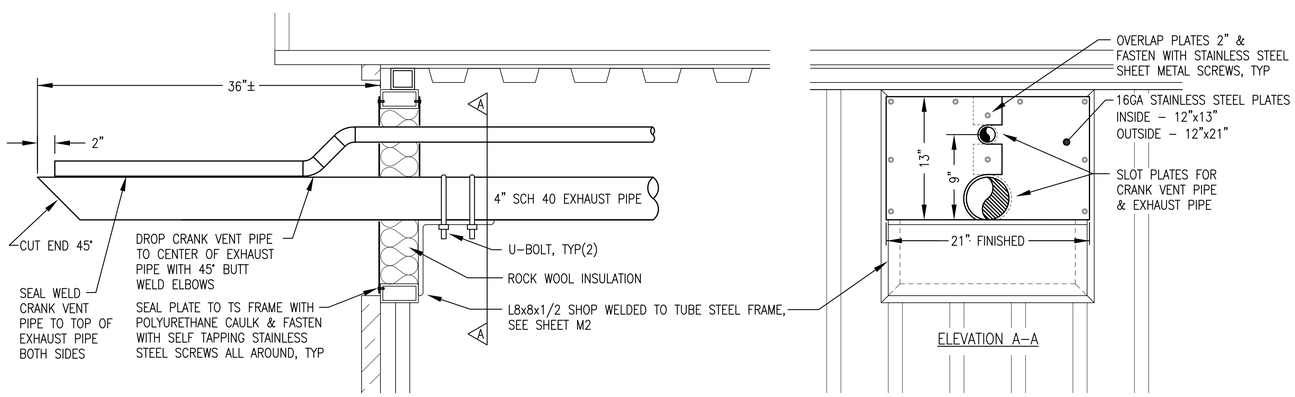

3 M6 EXHAUST & CRANK VENT PIPE INSULATED WALL PENETRATION & TERMINATION DETAIL
1-1/2"=1'-0"

ALASKA ENERGY AUTHORITY

STATE OF ALASKA 49TH BRIAN C. CROW ME 8210 REGISTERED PROFESSIONAL ENGINEER

CRW ENGINEERING GROUP LLC
PHONE: (907) 562-3252

Gray Stassel Engineering, Inc.
PHONE: (907) 349-0100

TWIN HILLS, ALASKA
TWIN HILLS RPSU PROJECT

STANDBY MODULE
EXHAUST & CRANK VENT PIPING

NO.	REVISION	BY	DATE
0	ISSUED FOR CONSTRUCTION	BCG	1/26/18

Plot Date 1/26/18
Designed BCG
Drawn JTD
Approved BCG

Sheet No.
M6

NOTE:
ALL WORK ON THIS SHEET SHALL BE ADDITIVE ALTERNATE B.

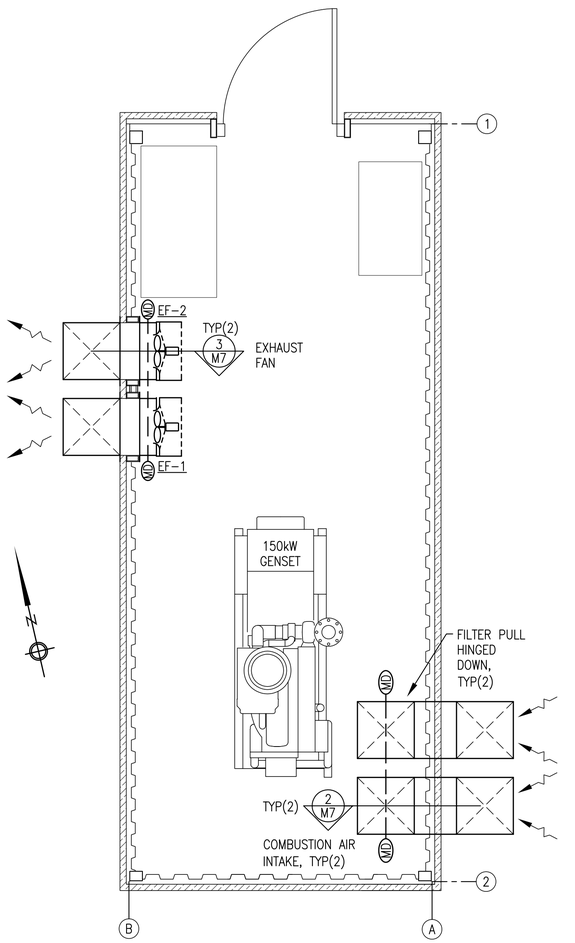

1 M7 VENTILATION PLAN
3/8"=1'-0"

NOTE: INTAKE DUCTS MUST BE INSTALLED SIMULTANEOUSLY WITH TRUSSES PRIOR TO ROOF BLOCKING & SHEATHING

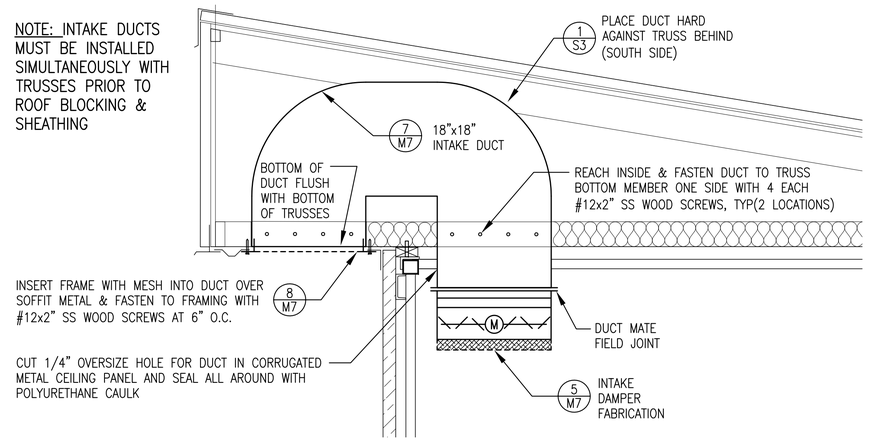

2 M7 INTAKE DUCT INSTALLATION
1"=1'-0"

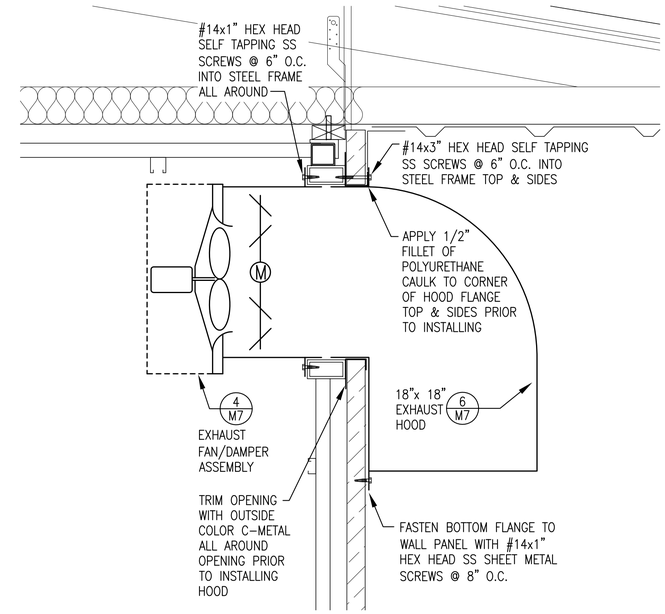

3 M7 EXHAUST FAN INSTALLATION
1-1/2"=1'-0"

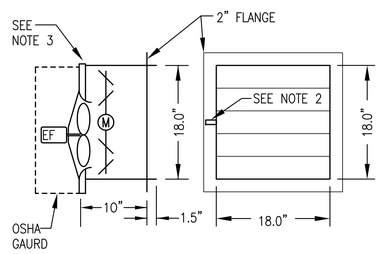

NOTES:

1) FABRICATE TWO IDENTICAL ASSEMBLIES COMPLETE WITH FAN AND DAMPER MOUNTED AND SEALED TO DUCT.

2) PROVIDE MIN 3" DAMPER ROD EXTENSION OPPOSITE SIDES ON TWO ASSEMBLES. INSTALL BELIMO AF-BUP ACTUATOR, NO SUBSTITUTES. FABRICATE SHEET METAL STAND-OFF BRACKET TO FULLY SUPPORT THE ACTUATOR FROM THE DAMPER FRAME.

3) PROVIDE TOP FLAT TRANSITION FROM 18x18 DAMPER TO 20x20 FAN AND CENTER DAMPER ON FAN SIDE-TO-SIDE.

4 M7 EXHAUST FAN ASSEMBLY FABRICATION
1"=1'-0"

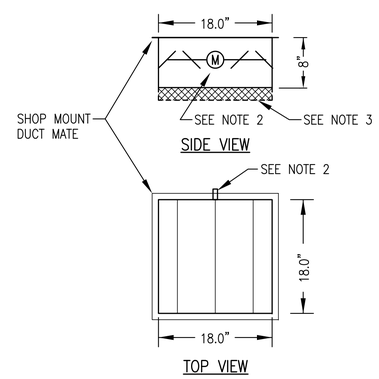

NOTES:

1. FABRICATE TWO IDENTICAL VENTILATION INTAKE ASSEMBLIES.

2. PROVIDE MIN 3" DAMPER ROD EXTENSION ON OPPOSITE SIDES ON TWO ASSEMBLIES. FABRICATE SHEET METAL STAND-OFF BRACKET TO FULLY SUPPORT THE ACTUATOR FROM THE DAMPER FRAME. INSTALL BELIMO AF-BUP ACTUATOR, NO SUBSTITUTES.

3. INSTALL HINGED FRAME FOR REMOVABLE 18"x18"x2" PLEATED FILTER. FABRICATE FROM "C" CHANNEL WITH HINGE ONE SIDE AND LATCH THE OPPOSITE SIDE TO ALLOW FILTERS TO BE LOWERED FOR REMOVAL.

5 M7 INTAKE AIR DAMPER ASSEMBLY FABRICATION
1"=1'-0"

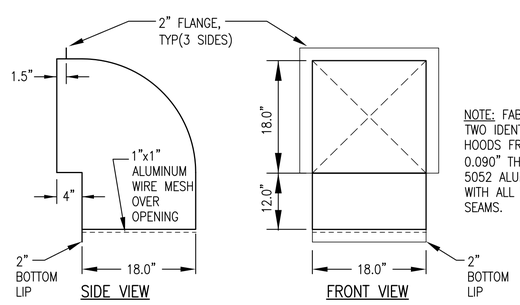

NOTE: FABRICATE TWO IDENTICAL HOODS FROM 0.090" THICK TYPE 5052 ALUMINUM WITH ALL WELDED SEAMS.

6 M7 EXHAUST HOOD FABRICATION
1"=1'-0"

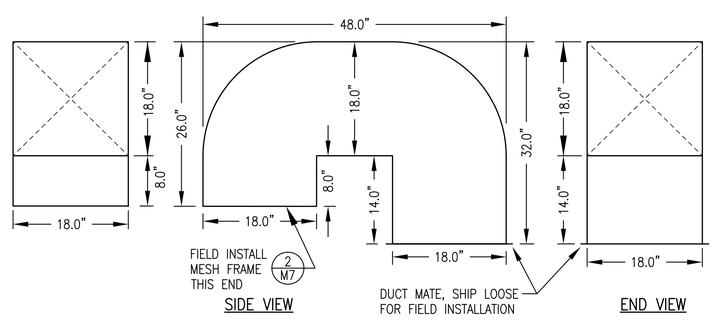

NOTE: FABRICATE TWO IDENTICAL HOODS FROM 0.090" THICK TYPE 5052 ALUMINUM WITH ALL WELDED SEAMS.

7 M7 INTAKE DUCT FABRICATION
1"=1'-0"

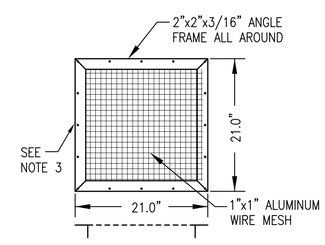

NOTES:

1. FABRICATE TWO IDENTICAL AIR INTAKE MESH FRAMES.

2. FABRICATE FRAME FROM 2"x2"x3/16" ALUMINUM ANGLE WITH MITERED AND WELDED CORNERS. INSTALL 1"x1" ALUMINUM WIRE MESH AND SPOT WELD TO FRAME ALL AROUND.

3. 1/4" HOLES AT 6" O.C. ALL AROUND, 1/2" FROM OUTSIDE EDGE OF FRAME.

8 M7 INTAKE DUCT MESH FRAME
1"=1'-0"

ALASKA ENERGY AUTHORITY

STATE OF ALASKA 49TH BRIAN C. GRAY ME 8210 REGISTERED PROFESSIONAL ENGINEER

CRW ENGINEERING GROUP LLC
PHONE: (907) 562-3252

Gray Stassel Engineering, Inc.
PHONE: (907) 349-0100

TWIN HILLS, ALASKA
TWIN HILLS RPSU PROJECT

STANDBY MODULE
VENTILATION & SHEET METAL FABRICATIONS

NO.	REVISION	BY	DATE
0	ISSUED FOR CONSTRUCTION	BCG	1/26/18

Plot Date 1/26/18
Designed BCG
Drawn JTD
Approved BCG

Sheet No.
M7